ORNL/TM--7448

DE93 003070

Contract No. W-7405-eng-26

CHEMICAL TECHNOLOGY DIVISION

EVALUATION OF THE SUBMERGED DEMINERALIZER SYSTEM (SDS) FLOWSHEET FOR DECONTAMINATION OF HIGH-ACTIVITY-LEVEL WATER AT THE THREE MILE ISLAND UNIT 2 NUCLEAR POWER STATION

D. O. Campbell
E. D. Collins
L. J. King
J. B. Knauer

Date Published: July 1980

OAK RIDGE NATIONAL LABORATORY
Oak Ridge, Tennessee 37830
operated by
UNION CARBIDE CORPORATION
for the
DEPARTMENT OF ENERGY

CONTENTS

EVALUATION OF THE SUBMERGED DEMINERALIZER SYSTEM (SDS) FLOWSHEET FOR DECONTAMINATION OF HIGH-ACTIVITY-LEVEL WATER AT THE THREE MILE ISLAND UNIT 2 NUCLEAR POWER STATION

D. O. Campbell
E. D. Collins
L. J. King
J. B. Knauer

ABSTRACT

The Submerged Demineralizer System (SDS) flowsheet for decontamination of the high-activity-level water at the Three Mile Island Unit 2 Nuclear Power Station was evaluated at Oak Ridge National Laboratory in a study that included filtration tests, ion exchange column tests, and ion exchange distribution tests. The contaminated waters, the SDS flowsheet, and the experiments made are described. The experimental results were used to predict the SDS performance and to indicate potential improvements.

1. INTRODUCTION

The Submerged Demineralizer System (SDS) flowsheet for decontamination of the high-activity-level water (HALW) at the Three Mile Island Unit 2 (TMI-2) Nuclear Power Station was evaluated at Oak Ridge National Laboratory (ORNL) in a study that included filtration tests, ion exchange column loading tests, and ion exchange distribution tests. The HALW at TMI-2 includes approximately 2650 m^3 (700,000 gal) of contaminated water in the floor of the Reactor Containment Building (CB) and approximately 340 m^3 (90,000 gal) of circulating cooling water that remains in the closed-loop Reactor Primary Coolant System (RCS).

Three 1-L samples of contaminated water were taken from the bottom of the CB during November and December of 1979 and were shipped to ORNL for use in the SDS evaluation tests. These tests were made during the period January-April 1980. Preliminary results were reported in a series of monthly letters from R. E. Brooksbank of ORNL to R. F. Wilson, Director of TMI-2 Recovery for General Public Utilities (GPU). Summary results were presented to the TMI-2 Technical Advisory Group on April 21, 1980, and to the TMI-2 Recovery staff on April 28.

The process to be used in the SDS for decontamination of the HALW was developed during mid-1979, following analyses and testing of samples of RCS water which were taken within a few weeks after the accident. Samples of CB water were not available until an access probe was installed in August. The RCS water samples were analyzed at ORNL during May and June, and some of the RCS water was used for distribution measurements with a variety of solid sorbents to determine the most favorable type of sorbent for the decontamination process. Also, small-column loading tests

were made using synthetic feed solutions traced with either ^{89}Sr or ^{137}Cs to determine the potential performance of ion exchange columns containing selected sorbents. The zeolite chabazite was selected as the appropriate sorbent that was commercially available and had a history of successful, large-scale usage.

On the basis of results from these tests, ORNL and Savannah River Laboratory personnel worked with members of the Technical Advisory Group to develop a proposed flowsheet. Then a processing system (the SDS) was designed by Allied General Nuclear Services (AGNS)[1] for Chem-Nuclear Systems, Inc. (CNSI), the prime contractor for fabrication, installation, and operation of the process equipment. The SDS was designed to decontaminate the HALW so that, when mixed with normal plant discharges, the concentrations of all nuclides (except tritium) would be <10% of the concentrations listed in 10 CFR 20.[2,3]

The first samples of CB water analyzed at ORNL were obtained in August 1979. Following the analyses, some of the water was used to make additional ion exchange distribution measurements. The results of those measurements indicated the presence of recalcitrant species of both strontium and cesium at estimated concentrations of 0.08% and 0.04% respectively. In effect, these species appeared to limit the decontamination available with the proposed SDS flowsheet to factors of approximately 1200 for strontium and 2400 for cesium. In addition, the sample taken from near the CB floor contained a significant volume of flocculent solids. This introduced the possibility that the filters specified for use in the proposed SDS might be inadequate for removing this type of solid material.

Based on the potential difficulties suggested by the presence of the solids and recalcitrant species, ORNL recommended that filtration and ion exchange column tests be made using actual water samples taken from near the CB floor for evaluation of the SDS process and for the development of potential process improvements (modifications). In addition, the NRC requested that GPU provide process evaluation data for use in a safety evaluation.

The experimental program that is the subject of this report resulted from an agreement between GPU and DOE. The technical scope was decided through consultation among GPU, ORNL, and the TMI-2 Technical Advisory Group. The report includes descriptions of the contaminated waters, the SDS process flowsheet, and the experiments that were performed. The experimental results were used to predict SDS process performance and to indicate potential improvements.

2. ANALYSES OF THE CONTAMINATED WATERS

The concentrations and total amounts of the chemical and radiochemical components in the RCS water and the CB water which are most significant relative to the performance of the SDS system are listed in Table 1. The values in the table for the RCS water are composites of analytical data for the samples that were taken earlier. The values for the CB water represent the analyses of the 1-L samples that were used for the flowsheet evaluation. Also listed in the table are the "relative ingestion hazards" of the dominant radionuclides. The relative ingestion hazard is defined herein as the ratio of the concentration of a radionuclide in the contaminated water to the concentration given in 10 CFR 20, Appendix B, Table

Table 1. Composition of contaminated water

(Values are corrected for radioactive decay to July 1, 1980.)

	Reactor coolant system	Containment building water	Total
Volume	90,000 gal	700,000 gal	790,000 gal
Sodium	1350 ppm	1200 ppm	3600 kg
Boron	3870 ppm	2000 ppm	38,000 kg (as H_3BO_3)
Cesium	1.5 ppm	0.8 ppm	2.6 kg
Strontium	<0.05 ppm	0.1 ppm	0.3 kg

Nuclide	Conc. (μCi/mL)	Relative ingestion hazard[a]	Conc. (μCi/mL)	Relative ingestion hazard[a]	Total (Ci)
^{3}H	0.17	60	1.0	300	2,500
^{89}Sr	5[b]	2,000,000	0.53	200,000	3,000
^{90}Sr	25[b]	80,000,000	2.3	8,000,000	14,000
^{106}Ru	0.1	10,000	0.002	200	40
^{125}Sb	0.01	100	0.02	200	50
^{134}Cs	10	1,000,000	26	3,000,000	67,000
^{137}Cs	57	3,000,000	160	8,000,000	410,000
^{144}Ce	0.03	2,000	0.0005	50	10

[a] Expressed as multiples of the concentrations listed in 10 CFR 20, Appendix B, Table II, Column 2.

[b] Values vary, probably because of precipitation.

II, Column 2, for that radionuclide. Although the 10 CFR 20 concentrations do not represent specifications for discharge of these post-accident waters from TMI-2, the relative hazards are useful for the design and evaluation of proposed water treatment processes. The relative hazard of a radionuclide indicates the numerical value by which the concentration of the radionuclide must be reduced, either by processing or by dilution. The reduction by processing is expressed as the decontamination factor (DF), which is the ratio of the concentration of a nuclide in the process feed solution to its concentration in the product solution.

Both waters contain sodium borate and boric acid; the pH is 8.2 in the RCS water and 8.6 in the CB water. Of the radionuclides now present, cesium and strontium will require the most decontamination. In addition to cesium and strontium, one of the important radioactive contaminants present in the waters is tritium (half-life = 12.3 y). This heavy isotope of hydrogen is present as tritiated water in concentrations that are minute but are still more than the 10 CFR 20 concentrations. The tritium will not be removed by the SDS process and will probably be handled by dilution with uncontaminated water after the other radioactive materials have been removed.

The radiocesium isotopes in both bodies of contaminated water are by far the predominant sources of gamma activity. Until the cesium concentrations have been reduced by several orders of magnitude, the decontamination process equipment must be both shielded and operated remotely to prevent excessive exposure to operating personnel.

The sample analyses have indicated that the concentration of ^{90}Sr in the RCS water increased from 0.04 to 7 uCi/mL during the first month

following the accident and then increased further to about 25 μCi/mL.[4] This behavior is in contrast to the concentrations of cesium and tritium which have decreased in a manner consistent with observed leakage rates of the contaminated water from the RCS (and with dilution by makeup water). The increased strontium concentration may have been due to continued leaching of exposed fuel; however, it is more likely that this increase has been caused by redissolution of a precipitated strontium form, such as strontium sulfate. Whatever the cause, the practical implication is that additional strontium may appear during the decontamination process.

A significant concentration of strontium has been found in an insoluble form in samples of water taken from the bottom of the Containment Building. In each 1-L sample, the concentration of solids in the slurry (liquid plus solids) was approximately 0.5 vol %, as determined by centrifugation; however, both the amount and nature of the solid material in the slurry sample may not be representative of the total solids within the building since the sample could be taken from only one location. Thus extrapolation of the data regarding the solids is very uncertain.

The key chemical and radiochemical constituents in the solids are listed in Table 2, along with the calculated percentage of each element and nuclide in the total sample (liquid plus solid) that was insoluble. Although the strontium was the predominant radionuclide in the solids, 92% of the strontium in the total sample was in the liquid phase. Essentially all of the cesium was in the liquid phase. Thus, even if these solids are dissolved during the decontamination process, the total amount of radioactive materials in the water would not increase significantly.

Table 2. Solids in one-liter samples of Containment Building water

Element	Conc. (g/mL solids[a])	% insoluble[b]	Nuclide	Conc. (μCi/mL solids[a,c])	% insoluble[b]
Copper	7500	99	^{90}Sr	38	8
Nickel	2500	≥98	^{89}Sr	8.7	8
Aluminum	1450	88	^{137}Cs	4.7	0.04
Iron	850	81	^{125}Sb	1.5	28
Silicon	650	10	^{144}Ce	1.4	93
Calcium	450	7	^{134}Cs	0.82	0.04
Zinc	400	≥87	^{106}Ru	0.76	66
Chlorine	400	10	^{113}Sn	0.23	d
Magnesium	150	10	^{95}Nb	0.14	97
Sulfur	100	d	^{129m}Te	0.077	d
Manganese	90	≥69	^{60}Co	0.073	88
Silver	55	d	^{54}Mn	0.030	d
Cadmium	55	d	^{110m}Ag	0.027	d
Tin	40	d	^{58}Co	0.020	88
Indium	30	d	^{103}Ru	0.010	66
Phosphorus	30	20			
Chromium	25	12			
Uranium	20	d			
Potassium	15	1			
Lead	10	d			
Yttrium	9	d			
Zirconium	7	d			
Cobalt	3.5	≥8			
Barium	2.5	≥11			
Strontium	2.5	≥11			
Cesium	0.5	0.04			

[a]Based on volume of solids after centrifugation.
[b]Percentage of element or nuclide in total sample (liquid plus solid) that is insoluble. Calculation based on total solids content of 0.5% (volume) in centrifuged sample.
[c]Concentration on July 1, 1980.
[d]Not measured in water.

3. DESCRIPTION OF THE SUBMERGED DEMINERALIZER SYSTEM

The flowsheet evaluated herein (Fig. 1) was that designed by AGNS for the SDS. In this flowsheet, the contaminated water is clarified by filtration (using a 75-um-rated prefilter and a 10-um rated final filter) during transfer into the ion exchange feed tanks. The clarified water is pumped through either or both of two duplicate trains of ion exchange columns. Each train consists of a series of three columns containing zeolite (Linde Ionsiv IE-95, formerly called AW-500, in the Na^+ form). The effluent from either train of zeolite columns is passed through either of two duplicate columns containing an organic cation exchange resin (Nalcite HCR-S, initially in the H^+ form). Finally, the effluent water from both cation resin columns is combined and passed through a single large polishing column containing layers of cation resin (HCR-S, initially in the H^+ form), anion resin (Nalcite SBR, initially in the OH^- form), and mixed resin (Nalcite MR-3, a 1:1 volume mixture of HCR-S and SBR).

The ion exchange columns are of modular design and can be moved easily. The zeolite and cation resin columns are of the same size although the volume of cation resin to be used is only one-half of the volume of zeolite that will be used in each column.

The operating procedure provides that 200 bed volumes of water will be passed through each zeolite column while it is in the first position. At that time, the column containing the loaded zeolite will be removed from the system, the other zeolite columns will be moved forward one position (countercurrent to the water flow), and a new zeolite column will be installed in the third position. In this manner, the zeolite columns

ORNL Dwg 80-10561AR

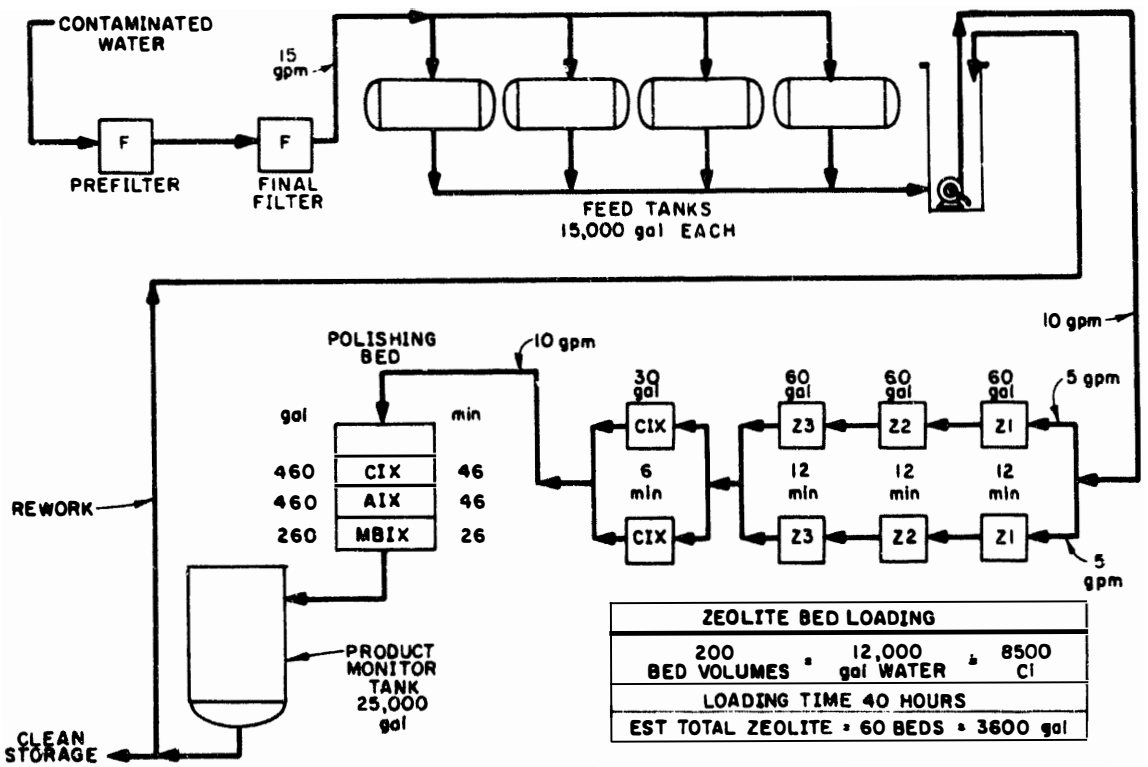

Fig. 1. Submerged Demineralizer System flowsheet.

will sorb most of the cesium while in the first position, and while in the second and third positions will provide the necessary residence time to allow the strontium to be sorbed. The cation resin columns and the polishing column will be changed when in-line monitors or periodic sample analyses indicate that a bed has become loaded.

4. FILTRATION

4.1 Estimated Amount and Character of Solids Material

All four samples of water taken from the bottom of the Containment Building contained flocculent solids; the amounts after settling and centrifuging are shown in Table 3. If such solids are present in a significant amount in the CB water and if the water is not clarified adequately, the solids could restrict or block the flow of water through the ion exchange columns. The uncertainty is, of course, whether the amount and nature of the solids in the samples are representative of the total within the building. Thus the amount present in the Containment Building is highly conjectural and can only be roughly estimated.

The sample taken in August contained a significantly larger concentration of solids, probably because (1) it was the first sample taken at the sample probe location, (2) the water (slurry) was not agitated before sampling, and (3) only a small volume was taken. The three large samples all contained a solids concentration of approximately 0.5% after centrifuging. These samples can represent no more than the bottom few inches in the building (a total volume of about 75 to 150 m^3, or

Table 3. Samples taken from the bottom of the Containment Building

Sample designation	Bottom	RB Sump 1	RB Sump 2	RB Sump 3
Date taken	8/79	11/15/79	12/5/79	12/5/79
Type	Unagitated	Agitated	Unagitated	Agitated
Volume (L)	0.03	1.05	1.15	1.15
Solids content, vol %				
Settled	10	1.0	2.0	Not meas.
Centrifuged	4	0.5	0.5	~0.5

20,000 to 40,000 gal). On this basis, the total volume of solids is estimated (at 0.5% concentration) to be approximately 0.4 to 0.8 m^3, or 100 to 200 gal (equivalent to centrifuged solids). Other methods of estimation have indicated the presence of a similar amount.

The solid materials present in the samples are precipitates (probably hydroxides) of primarily copper, aluminum, nickel, and iron, as shown in Table 2. The copper and iron were observed (by the color of the precipitate) to be present in their chemically reduced states (cuprous and ferrous). The predominant radioactive nuclide in the solids is ^{90}Sr. It is significant to note that the bulk of the solids (all that is visible to the naked eye) can be dissolved by the addition of enough acid to lower the pH to 3. However, such an acidification could be detrimental to the subsequent ion exchange operations and, thus, has not yet been considered as a process option.

Sedimentation tests indicated that the bulk of the solids was heavy enough to settle within 30 to 60 min; however, a visible haze remained in the supernate for 10 to 20 h. These results indicate that, if the water in the Containment Building floor could be decanted from near the surface, the solids would not be encountered in the SDS until the building is nearly empty. However, plans are to pump the water through the 46-cm-diam (18-in.-diam) uptake line in the building sump. Even though this is a relatively large pipe, the liquid velocity, approximately 38 cm/min (15 in./min) at a flow rate of 60 L/min (15 gal/min), will be fast enough to cause transfer of a significant fraction of any solids within the pipe.

4.2 Filtration Tests

The total solids content in the three 1-L samples was not large enough for extensive filtration tests. Thus a synthetic slurry was formulated to the same chemical composition as the actual slurry and was used to evaluate a variety of filter media and filtration methods. Care was taken to ensure that the chemically reduced states were maintained and that the synthetic slurry was formulated in such a way that the settling characteristics were similar to those observed for the actual slurry.

Scouting tests were made first using glass frit filters. The results, summarized in Table 4, showed that, the coarse filter (40 to 60-um pore size) did not remove the solids efficiently unless it was precoated with a filter aid. The medium grade filter (10 to 15-μm pore size) did remove the solids but only at a slow flow rate. When either filter was precoated with a diatomaceous earth filter aid, the solids-removal efficiency and flow rate were satisfactory. The ranges in particle sizes of the two grades of filter aid that were examined are shown in Table 5.

Table 4. Filtration scouting tests using synthetic TMI slurry and glass frit filters

Filter type	Pore size (μm)	Flow rate	Relative turbidity of filtrate[a]
Coarse	40-60	Fast	46
Medium	10-15	Slow	2.5
Fine	4-5.5	Slow	2.1
Coarse (precoated[b])	--	Fast	3.3
Medium (precoated[b])	--	Fast	1.2

[a]Relative turbidity of mixed, synthetic slurry ≅ 50 and laboratory demineralized water = 0.15. At turbidities below about 5, the solids present are not easily seen by the human eye.
[b]Approximately 0.6-cm thickness of Celite 535.

Table 5. Diatomaceous earth filter aids

Particle size (μm)	Typical analysis (wt %)	
	Standard Super-Cel	Celite 535
<2	10.0	--
2-4	17.0	3.0
4-6	24.0	3.0
6-8	16.0	6.5
8-10	9.0	10.0
10-20	15.0	37.5
20-40	4.5	26.0
40-60	4.5	14.0

The Standard Super Cel (with a particle-size range predominantly <10 um) was found to cause slow flow rates and a high pressure drop, while the Celite 535 (with a size range predominantly between 10 and 60 um) was found to give good performance.

Quantitative loading data were obtained using the synthetic-slurry and sintered-metal filters (Mott Metallurgical Corporation) having 5-, 10-, 20-, and 40-μm ratings. The experimental equipment arrangement is shown in Fig. 2. The mixed slurry was pumped either upflow through the filter housing (with the filter located in the top of the housing) or downflow (with the filter at the bottom of the housing), and the tests were terminated when the pressure drop exceeded 240 kPa (35 psi). The turbidity of the filtrate solution was compared to the turbidity of the feed slurry to provide a measure of the filtration efficiency. At the flow rates used, 150 to 500 mL/s-m^2 (0.22 to 0.74 gal/min-ft^2), the holdup time in the test filter housing was similar to that in the SDS filter housing.

Results of the filtration tests, summarized in Table 6, indicate that (1) the use of a filter aid will be necessary to achieve a satisfactory filtration efficiency, and (2) the use of a downward direction of flow, with the filter located at the bottom of the housing, will be necessary to maintain an adequate covering of the filter surface with filter aid, especially during operations in which it is necessary to stop and start the flow. Use of a 40-μm-rated filter, covered by several inches of Celite 535, gave the best results.

The prefilter—final-filter technique currently planned for SDS operations has been evaluated in large-scale tests at AGNS[5] while using a

ORNL Dwg 80-10562AR

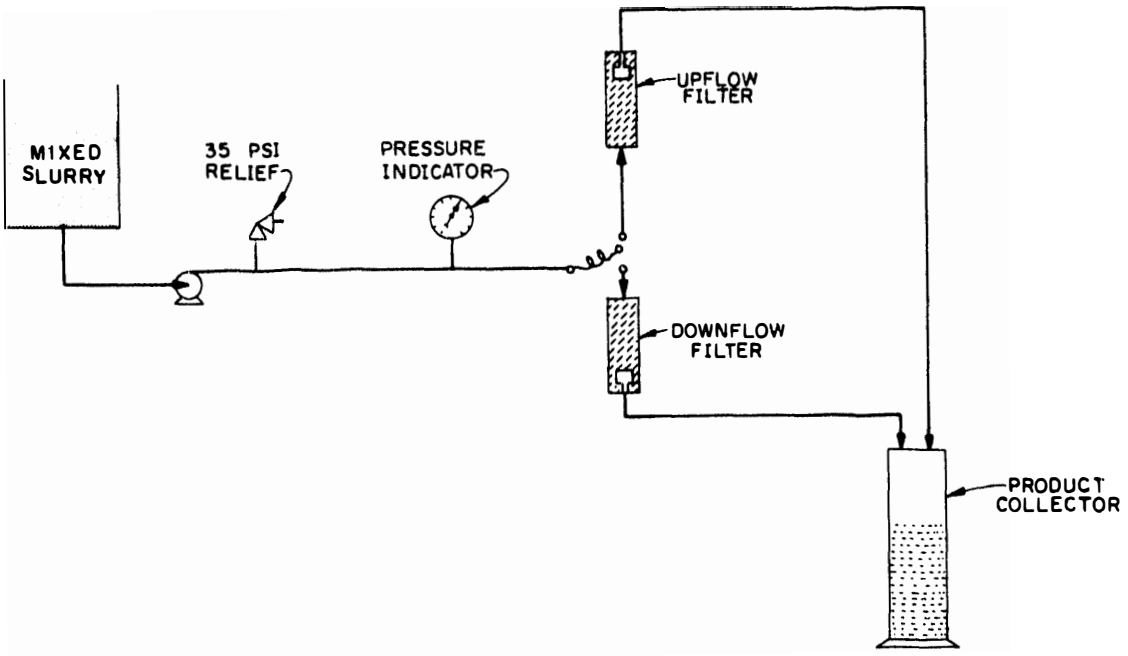

Fig. 2. Filter-loading test apparatus.

Table 6. Filter loading tests using synthetic slurry[a]

Filter rating (μm)	Flow rate (gal/min-ft^2)	Filter loading[b] (in.)	Filtrate turbidity[c] (%) Average	EOT[d]
5	0.22	0.59	0.8	93.5
20	0.22	1.06	49.8	73.9
40	0.22	1.22[e]	37.5	84.1
20	0.22	1.06	49.8	73.9
20	0.45	0.59	63.8	82.1
20	0.74	0.31	69.1	86.1
	0.12-in. filter aid -- upward flow			
5	0.22	0.51	0.5	0.2
20	0.22	0.59	0.5	1.0
40	0.22	0.94	1.5	2.4
10	0.74	0.16	9.3	17.0
20	0.74	0.28	4.1	5.5
40	0.74	0.28	22.6	28.3
	1.5-in. filter aid -- downward flow			
20	0.22	1.65	0.4	0.2
40	0.22	1.50[e]	0.7	0.2
40	0.74	3.03	0.4	0.3

[a]Synthetic slurry contained 1.0% (volume) solids.
[b]Calculated average depth of solids on filter (volume of solids, in.^{3}, per filter area, in.^{2}).
[c]Filtrate turbidity in % of feed slurry turbidity.
[d]End of Test.
[e]Test terminated before ΔP reached 35 psi.

synthetic slurry similar in composition to that used at ORNL. The results of the AGNS study indicated that 70% of the suspended solids would be removed by the prefilter—final-filter technique and that the filtrate contained very fine suspended solids. This procedure may be acceptable if the fine suspended solids do not plug the first zeolite bed during its intended life [processing of 200 bed volumes or a total of 45 m^3 (12,000 gal) of water]. However, the precoated, downward-flow filter, shown to give optimum results in this study, should be considered if filtration or column plugging difficulties are encountered in SDS operations.

5. ION EXCHANGE COLUMN TESTS

In the initial ion exchange tests, the SDS flowsheet was divided into five parts (tests TMI-IX1 through TMI-IX5) in order to measure the concentrations of the various radionuclides in several of the column effluent streams. Subsequently, a test (TMI-IX6) of only the series of three zeolite columns was made. An outline of the tests and the time intervals involved are shown in Fig. 3. The initial zeolite ion exchange column loadings (IX1 and IX6) were done in a shielded, manipulator-operated hot cell. Following these tests, in which the bulk of the gamma-emitting radionuclides (primarily cesium) was removed, the water was transferred to a laboratory hood where the remaining tests (IX2 through IX5) were made.

ORNL Dwg 80-12714

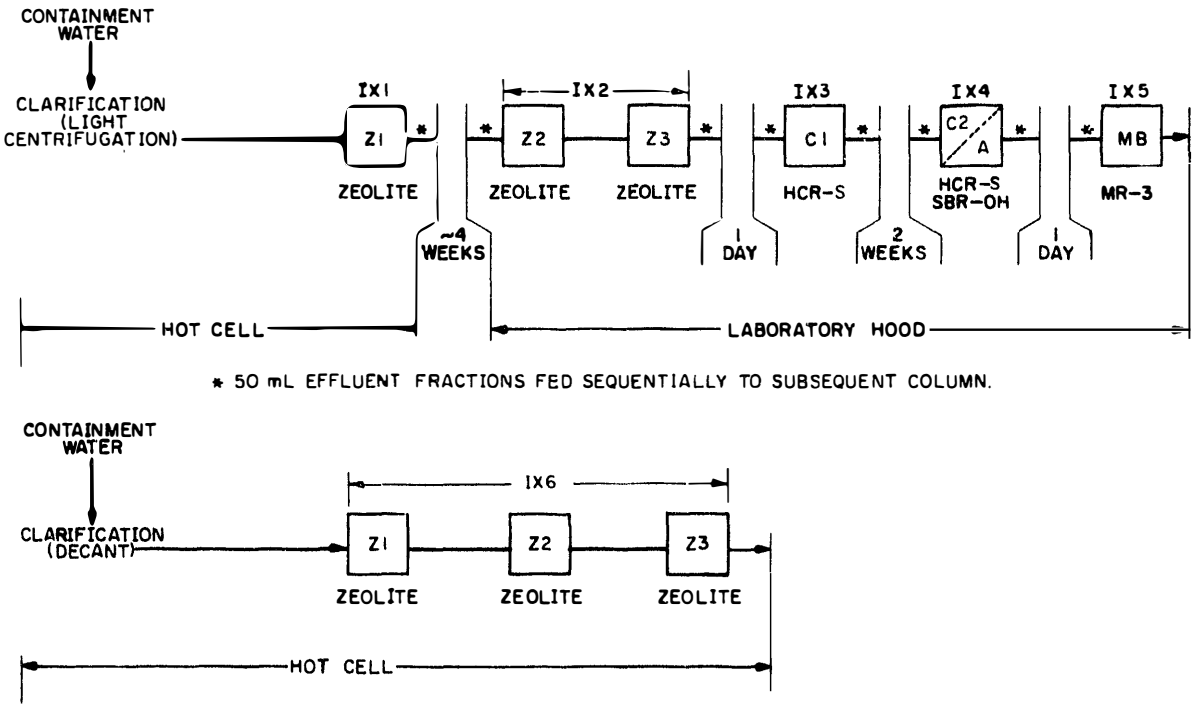

Fig. 3. Outline of ion exchange column tests performed.

5.1 Experimental Equipment

The feed reservoir used in the ion exchange column tests consisted of a Marriotti Bottle, which provided a constant head pressure for gravity flow of the feed through the resin bed. The column effluent flow rate was controlled with a flow-metering teflon stopcock to within ±3% of the desired value. In all of the ion exchange column tests, the liquid flow rates were set to provide the same resin contact times as those intended for full-scale operations.

Small glass ion exchange columns, such as that illustrated in Fig. 4, were used. The zeolite bed volume of 2 mL was the minimum that could be used with the flow control methods available to provide a bed residence time similar to that intended for the SDS beds (12 min). The column diameter was sized so that the ratio of column diameter to zeolite particle diameter, while using commercially available, 20 to 50-mesh zeolite, was large enough to prevent flow channeling.[6] The diameters of the zeolite and cation resin columns were 11.6 mm, those of the cation and anion beds of the polishing column were 28 mm, and that of the mixed resin bed was 15 mm.

5.2 Experimental Procedure

The sorbents and conditions used during each test run are summarized in Table 7. Prior to IX1, a 2-L volume of Containment Building water was clarified by means of a "light" centrifugation (to simulate a roughing filtration). The clarified feed, representing 1000 bed volumes based on the volume of each zeolite bed, was passed

ORNL Dwg 80-12715R

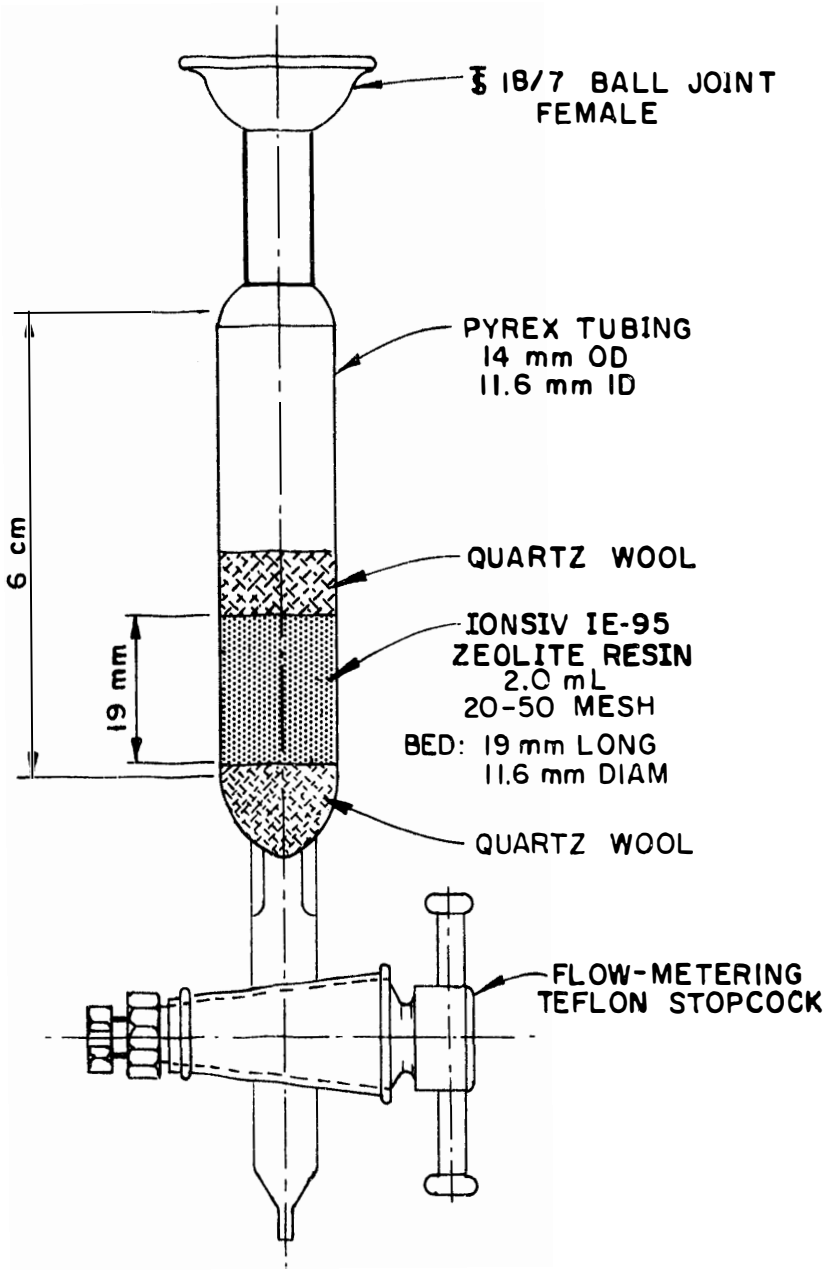

Fig. 4. Schematic diagram of column used in test run TMI-IX1.

Table 7. Experimental conditions for ion exchange column tests

Test run	Date started	Number of IX beds	Type resin	Volume (each bed) (mL)	Flow rate (mL/h)	Residence time (each bed) (min)	Total through-put (mL)	Column L/D[a]
IX1	1/02/80	1	IE-95(Na)	2.00	8	15	2000	1.64
IX2	2/04/80	2	IE-95(Na)	2.00	10	12	1230	1.64
IX3	2/05/80	1	HCRS(H)	1.00	10	6	1140	0.82
IX4	2/19/80	2	HCRS(H)/SBR(OH)	7.73	10	46	1025	0.45
IX5	2/20/80	1	MR-3	4.37	10	26	950	1.67
IX6	3/31/80	3	IE-95(Na)	2.00	10	12	400	1.64

[a] Ratio of bed length to bed diameter.

through the first zeolite column at a flow rate of 8 mL/h (residence time of 15 min). This was a slightly longer residence time than is planned for the SDS zeolite beds (12 min), but the difference was not considered to be significant. Also, the throughput was much larger than the 200 bed volumes intended for the SDS columns, but the larger throughput was useful for the determination of the sorption behavior of the various radionuclides, especially cesium and strontium. The column effluent was collected in 50-mL fractions, and 10-mL samples were taken from selected fractions for chemical and radiochemical analyses.

Fraction numbers 1 to 28 (a total of 1300 mL, or 650 bed volumes, after removing samples) were transferred from the hot cell to a laboratory hood; starting about 4 weeks later, the fractions were fed sequentially (to simulate a continuous flow) through the second and third zeolite columns (test IX2). The effluent from the third zeolite column was collected in 50-mL fractions, which (after the sampling of selected fractions) were fed sequentially to the cation column in test IX3. A similar procedure was used in tests IX4 and IX5. The bed residence times during tests IX2 through IX5 were the same as those intended for actual SDS operation.

In the continuous-flow test of the series of three zeolite columns with no time delays (test run IX6), 400 mL of Containment Building water (200 bed volumes based on each zeolite bed) was clarified by means of settling and decantation. This water was passed through the three columns at a rate of 10 mL/h (12-min residence time for each zeolite bed or 36 min for all three). The effluent water was collected in 50-mL fractions, and all were sampled.

The 10-mL samples taken from selected column effluent fractions during the tests were analyzed by gross beta and gamma counting, gamma spectrometry, and radiochemical methods (RCA) for ^{89}Sr and ^{90}Sr. Certain fractions also were analyzed for chemical elements by spark source mass spectrometry. Measurements of pH (a nondestructive analysis) were made directly on selected 50-mL fractions. All of the loaded sorbents, except the first zeolite beds of tests IX1 and IX6, were analyzed by gamma-spectrometry.

5.3 Experimental Results and Discussion

Certain analytical constraints were imposed by the nature of these experiments. First, the volumes of the sample aliquots were limited. Second, the counting rates were at very low levels for many of the radionuclides, and the presence of comparatively high concentrations of certain constituents, especially ^{125}Sb, interferred with the detection of other radionuclides. As a result of these constraints, many of the analyses were reported with large degrees of uncertainty (±10 to 30%) and with relatively large limits of detection. These analytical effects must be considered when making any interpretation of the radionuclide concentrations given here. Complete sets of the measured radionuclide and chemical concentrations in the various column effluent streams and solid wastes are given in Tables A-1 through A-11 of the Appendix.

The concentrations of the predominant radionuclides present in the Containment Building water and the relative hazards, based on 10 CFR 20, are given in Table 1. The relative ingestion hazards represent the factor by which the radionuclide concentrations exceed the concentrations given

by 10 CFR 20 and are the criteria used herein to evaluate the performance of the SDS sorbents. The largest decontamination (and/or dilution) factors (>8 x 10^6) will be required for ^{90}Sr and ^{137}Cs.

The DFs obtained in the column tests have been expressed herein in several different ways, which are summarized in Table 8. Instantaneous DFs, relative to concentrations in the CB water, are shown as functions of the volume of water processed for cesium and strontium, the two major contaminants, and for antimony and ruthenium, two of the minor contaminants, in Figs. 5 and 6, respectively. The DFs for cesium and strontium, expressed in other ways, are shown in Figs. A-1 to A-6 of the Appendix.

The presence of a non-ionic species of cesium in the effluent from the first zeolite column was suspected because the DF was essentially constant at 10^4 throughout the test (a total of 1000 bed volumes was passed through the first column), and because a gamma profile of the column, shown in Fig. 7, indicated that the bottom half of the column was not loaded. The gamma profile was substantiated by solidifying the column with epoxy resin, cutting the column into five sections, and assaying each section by gamma counting. The results of the section counting are shown in Fig. 8.

Since the cesium contained in the effluent from the first zeolite column was suspected of being non-ionic, the relatively large DF (about 400) obtained in the second and third zeolite columns (test IX2) was not expected. In the sequence of tests, a 4-week period ensued after the water was passed through the first zeolite column (test run IX1) and before it was passed through the second and third zeolite columns (IX2).

Table 8. Expression of DFs obtained in ion exchange column tests

DF type	Representing concentrations in:	Relative to concentrations in:	Shown in figure numbers
Instantaneous	Column effluent streams	CB water	5 and 6
Instantaneous	Column effluent streams	Column[b] feed stream	A-1 and A-2
Cumulative	Accum. column effluent[a]	CB water	A-3 and A-4
Cumulative	Accum. column effluent[a]	Accum. col.[b] feed stream	A-5 and A-6

[a] Equivalent to accumulated product water, if no further treatment was made.

[b] Column contained two zeolite beds in test IX2 and a cation and an anion bed in test IX4.

ORNL Dwg 80-12355R1

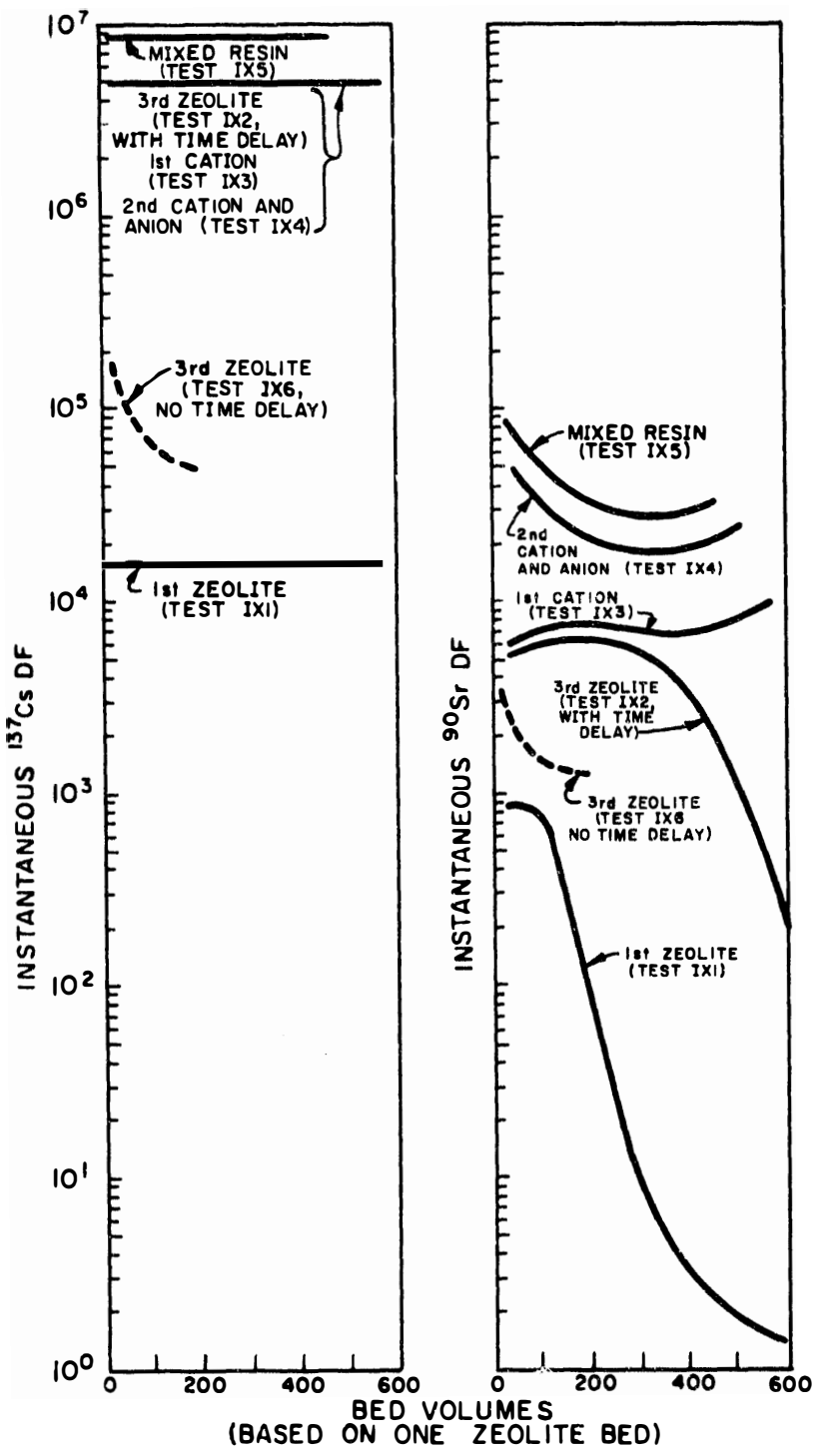

Fig. 5. Cesium and strontium decontamination factors for column effluent streams. (Decontamination factors calculated from instantaneous concentrations in column effluents relative to concentrations in CB water.)

ORNL Dwg 80-12356R3

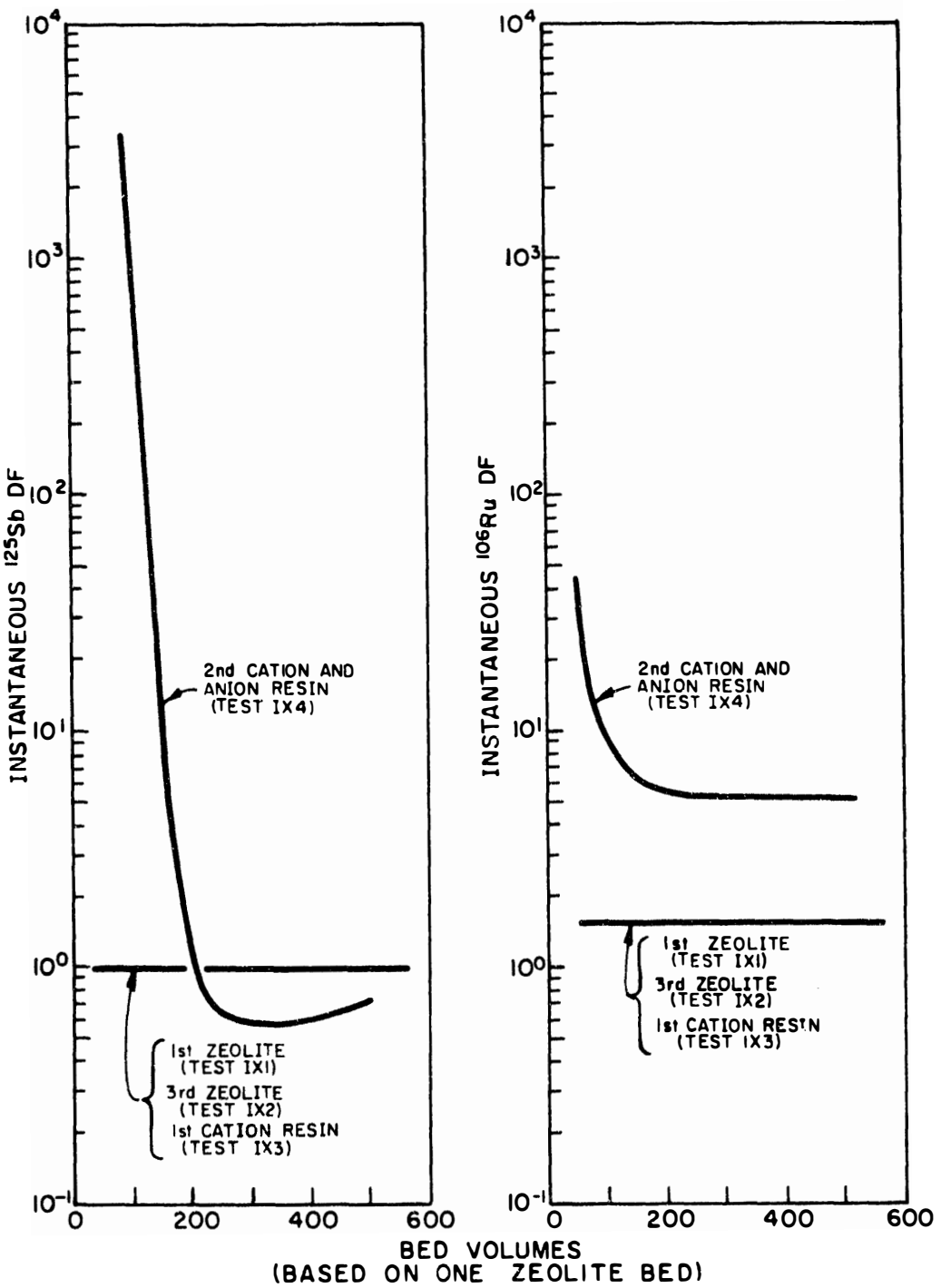

Fig. 6. Antimony and ruthenium decontamination factors for column effluent streams. (Decontamination factors calculated from instantaneous concentrations in column effluents relative to concentrations in CB water.)

ORNL Dwg 80-657R3

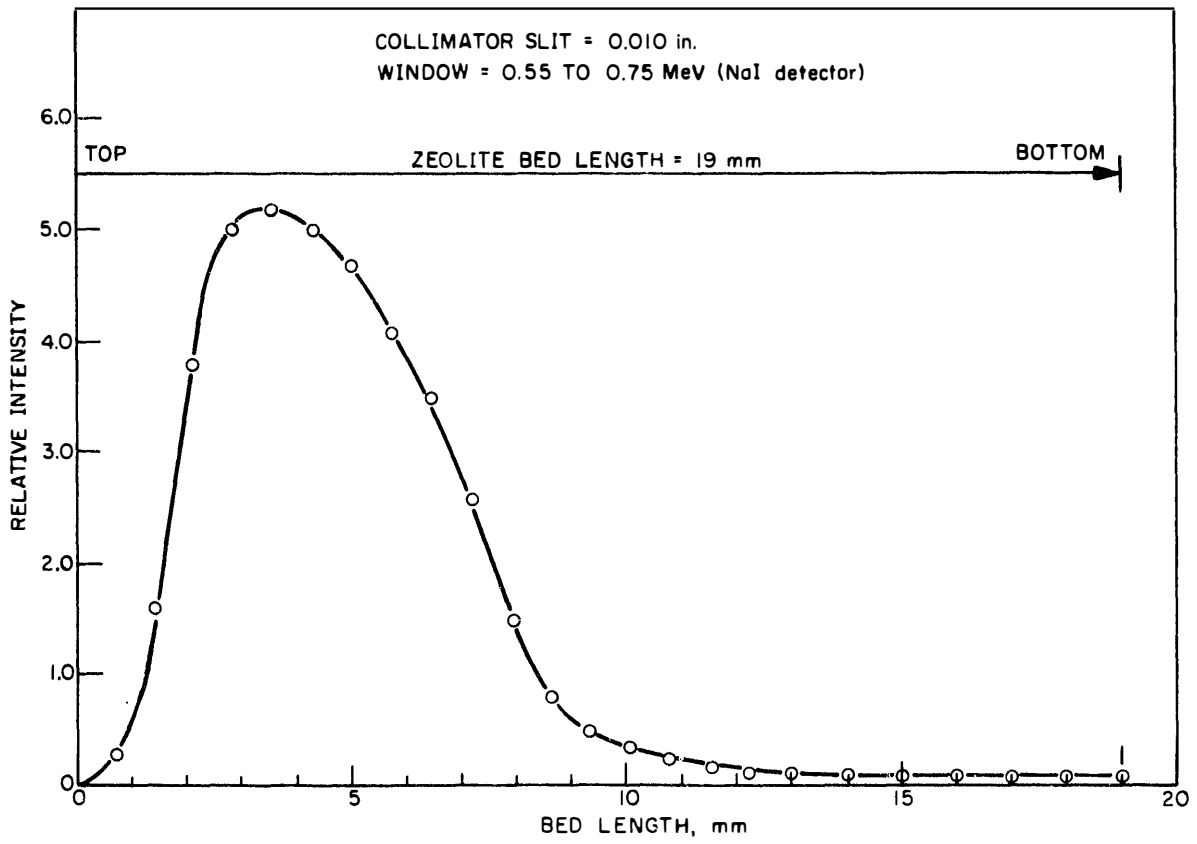

Fig. 7. Cesium-137 activity profile of TMI-IX1 test column (2.0 mL of Ionsiv IE-95 zeolite resin).

ORNL Dwg 80-658R

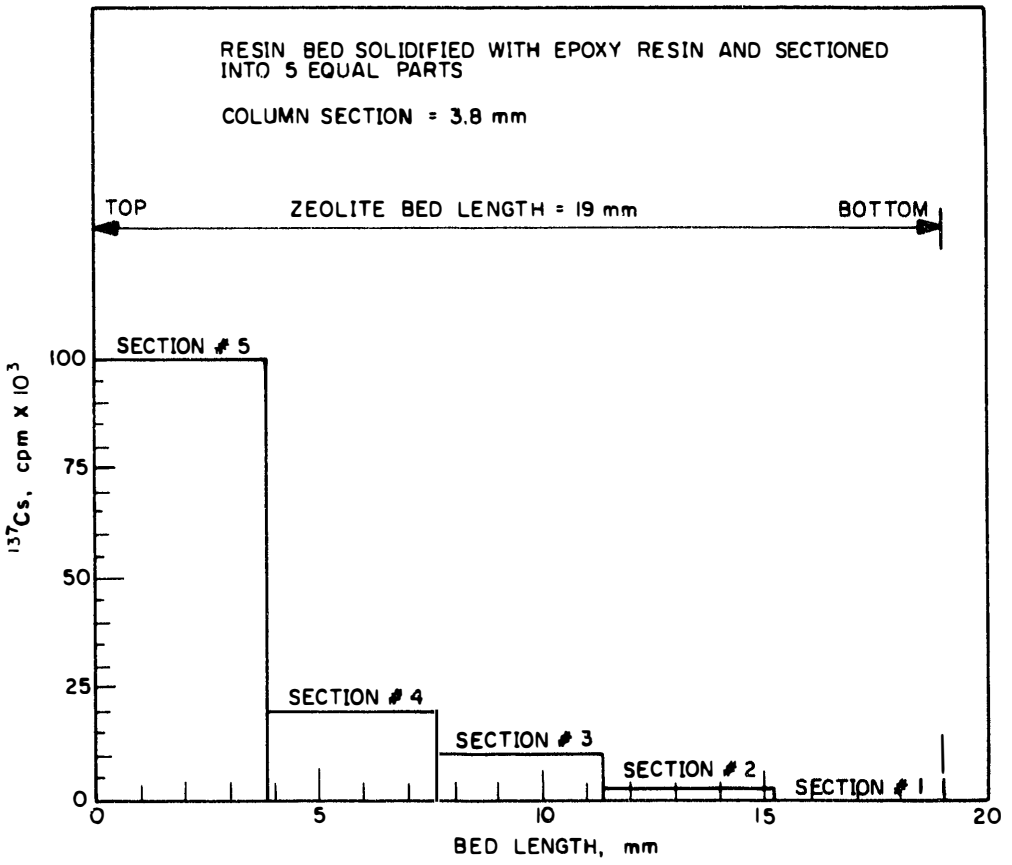

Fig. 8. Cesium-137 activity in sections of TMI-IX1 test column.

This time interval was necessary so that the effluent water fractions from IX1 could be transferred from the hot cell and into a laboratory hood, for assembly of equipment in the hood, and for analyses of the many samples. During the time period between tests IX1 and IX2, non-ionic species present in the first column effluent could have been transformed into exchangeable species; therefore, the DF measured for the three columns might have been lower if the water had been passed continuously through a series of three zeolite columns with no time delay. This possibility was investigated by running another test (IX6) in which the contaminated water was passed continuously through a series of three zeolite columns. The results of this test (shown as dotted lines on the DF curves on Fig. 5) confirmed that the time delay (aging) period between tests IX1 and IX2 resulted in higher DFs for both cesium and strontium, and that the effect was more pronounced for cesium than for strontium.

Figures 5 and 6 show that the organic cation bed (test IX3) had no effect on the effluent from the third zeolite bed, except for strontium removal after a throughput of approximately 400 bed volumes (based on each zeolite bed). This is, of course, beyond the region of interest for the intended SDS operation. The DF for cesium was not improved in the cation/anion beds of the polishing column (test IX4) and was only slightly improved (by less than a factor of 2) in the mixed resin bed (test IX5). The strontium DF was slightly improved in both the cation/anion beds (IX4) and the mixed resin bed (IX5).

During the first part of test IX4, both ^{125}Sb and ^{106}Ru were removed from the water by the anion resin bed, as illustrated in Fig. 6. During this period of operation, the replacement of Na^+ ions with H^+ ions in the

preceding cation resin bed had lowered the pH of the water entering the anion resin bed and apparently had made it effective for sorption of the antimony and ruthenium. Subsequent distribution coefficient (K_d) tests also have shown this effect (see Sect. 6.3.1); that is, as the pH was lowered from 8.6 to 7.3 to 6.4 by means of a pretreatment with a cation exchange resin, the K_d for ^{125}Sb on the anion resin (borate form) was increased from 40 to 200 to 1500. This effect is apparently due to a reduction of the borate ion content by conversion of the sodium borate to weakly ionized boric acid. This is, essentially, a deionization of the water (the boric acid is not removed).

The elemental chemical compositions of the CB water and several of the effluent fractions from the column tests were obtained by spark source mass spectrometry and are given in Tables A-8 to A-10 of the Appendix. Of the 27 elements measured, very few were affected in the SDS process. The notable exceptions included rubidium, which was the only element removed with the cesium and strontium in the zeolite beds, and the periodic removal of sodium and boron as they were exchanged with the hydrogen ions of the cation resin and the hydroxide ions of the anion resin, respectively, in the initial periods of tests IX3, IX4, and IX5.

These column tests demonstrated that relatively large DFs can be obtained for cesium and strontium by means of zeolite ion exchange, and that the DFs were not improved significantly by the use of organic cation and anion exchange resins. Small fractions of the cesium and strontium and larger fractions of the initially minor contaminants were not removed by the combination of sorbents planned for use in the SDS. As a result, several radionuclides are expected to be present in the effluent from the SDS in concentrations ranging from 10^{-2} to 10^{-4} μCi/mL.

5.4 Problem Areas

The presence of poorly sorbed radionuclides and recalcitrant species of radionuclides that are usually sorbed limits the decontamination that can be obtained by ion exchange. Additional cycles of ion exchange would be completely ineffective unless the chemical nature of these materials is changed. The "problem" materials that are encountered are likely to be one of the three types described as follows.

5.4.1 Poorly sorbed radionuclides

Certain radionuclides behave in a straightforward manner in terms of chemistry, but their properties are such that they are not readily removed from the water. In some cases, chemical adjustments can be made to obtain a more favorable distribution behavior. A radionuclide of this type, in the case of the CB water, is ^{125}Sb. The removal of ^{125}Sb during the early part of test runs IX4 and IX5 is an example of the effect of a chemical adjustment, although the adjustment was not done purposely in this case.

5.4.2 Recalcitrant species

Most of the cesium and strontium in the CB water is ionic and is readily sorbed by appropriate cation exchangers. However, small fractions (approximately 0.01% of the cesium and 0.1% of the strontium) are present in forms that are not readily exchangeable and do not revert promptly to (or are not in equilibrium with) the normal ionic form. For example, the cesium and strontium that were not sorbed in the tests may have been

adsorbed onto some other material which is insoluble. If this is the case, some way must be found either to remove the insoluble material or to remove the cesium and strontium from it.

5.4.3 Hydrolyzed and insoluble species

Several radioactive elements present in small amounts were not removed effectively by the SDS sorbents. These include Ru, Ce, Co, Nb, and Zr, all of which appeared to be relatively insoluble, as shown in Table 2. Some of these elements might be dissolved and made exchangeable if the pH of the water (8.6) is reduced substantially. If the insoluble elements are present as colloids, they might be removed by coagulation if the zeta potential of the water is minimized. Removal of such materials is accomplished in some cases by completely demineralizing the water and passing it through layers of different ion exchange resins in order to raise and lower the pH of the water repeatedly while presenting different surface properties to the water.

6. ION EXCHANGE DISTRIBUTION MEASUREMENTS

A few distribution experiments were made to interpret the behavior of the radionuclides that had not been removed by the SDS sorbents and to indicate possible methods for improving the performance of the SDS. In these experiments, fraction numbers 29-39 of the effluent water from test run IX1 were used. The cesium concentrations in these fractions had been reduced in the column tests by a factor of about 10^4, but the other radionuclide concentrations, including those of the strontium isotopes, had not been reduced significantly. The resins tested were as follows:

Ionsiv IE-95 (AW-500) zeolite; HCR-S and IRC-50 cation resins; and SBR, Dowex 2, and Ionac A-580 anion resins. Reagent-grade nitric, boric, oxalic, formic, and aminoacetic acids and D-fructose were used for making pH adjustments.

6.1 Experimental Equipment

Resin weights were obtained to within ±0.01 g using a Satorius 1202MP balance. A Beckman Expandomatic SS-2 pH meter was used to obtain pH measurements on feed and raffinate solutions. The batch equilibrations were carried out in Pyrex glassware, with phase mixing provided by a wrist-action shaker. Feed and sample volumes were measured with a Gilson K5000 automatic micropipette.

6.2 Experimental Procedure

The resin was converted to the desired ionic form and then air dried and weighed in tared glassware. Following the desired pretreament (pH adjustment, addition of complexing agent, etc.) of the feed water, the proper volume was combined with the resin, and the phases were mixed for 24 h. The resulting supernate was removed from the resin and submitted for gamma scan and radiostrontium analyses.

Feed pH adjustments were made (1) by the addition of nitric, formic, oxalic, or aminoacetic acids; (2) by cation exchange using HCR-S or IRC-50 resin; or (3) by the addition of D-fructose, as a complexing agent. In all cases, additions were made while monitoring the feed pH and were discontinued when the desired pH was reached. Other feed

modifications included (1) filtration through a 0.1-μm Millipore filter and (2) addition of 1 and 10 ppm of lanthanum as $La(NO_3)_3$.

Some of the anion resins were converted to the borate form by successive washes with 0.7 M H_3BO_3 before the distribution measurements were made. The resin was washed until the pH of the wash solution reached that of the boric acid (pH 3.3). The resins were washed with water to remove excess boric acid and then air dried prior to weighing.

6.3 Experimental Results and Discussion

6.3.1 Removal of ^{125}Sb

Strong-base anion resin (SBR) in both the hydroxide and borate forms removed ^{125}Sb, but the K_ds were undesirably small (in the range 21 to 44), as shown in Table 9. Ruthenium was also removed, but to an even smaller extent. The significance of the low K_d is that antimony would break through an anion exchange column after only a few bed volumes (as observed in column tests IX4 and IX5). A loading capacity of several hundred bed volumes prior to breakthrough would be required for an acceptable process.

Antimony probably exists in the water as a mixture of neutral and anionic oxy-species that are in equilibrium with each other. Since the K_d with the CB water, as presently constituted, is undesirably small, methods for improving the K_d were investigated. In general, these methods involved various ways of reducing the concentration or changing the nature of the competing anions. The competing anion in the CB water is borate, which is at a concentration equivalent to that of the Na^+ ion (most of the boron is present as weakly ionized, or essentially neutral, boric acid). The borate can be removed directly by anion exchange, but this

Table 9. Distribution measurements for zeolite effluent solution with SBR resin

	Test 1-2					Test 1-3				
Stage	1			2		1			2	
Resin	SBR			SBR		SBR			SBR	
Initial form	OH^-			OH^-		$H_2BO_3^-$			$H_2BO_3^-$	
Weight, g	2.0			1.0		2.0			1.0	
Feed source	IX1-29			Stage 1 supernate		IX1-30			Stage 1 supernate	
Treatment	None			None		None			None	
Volume, mL	20			10		20			10	
	Conc. (μCi/mL)			Conc. (μCi/mL)		Conc. (μCi/mL)			Conc. (μCi/mL)	
Key radionuclides	Feed	Supernate	K_d	Supernate	K_d	Feed	Supernate	K_d	Supernate	K_d
^{90}Sr	2.4	2.4	--	2.2	1.1	2.3	2.2	0.6	2.2	--
^{106}Ru	1.1E-3	7.8E-4	4.5	$\leq$4.9E-4	$\geq$6.1	1.2E-3	4.9E-4	16	$\leq$3.0E-4	$\geq$6.4
^{125}Sb	2.0E-2	3.7E-3	44	1.2E-3	21	2.0E-2	5.1E-3	29	1.1E-3	35
^{137}Cs	4.1E-3	4.2E-3	--	4.1E-3	--	4.6E-3	4.7E-3	--	4.1E-3	1.6
pH	8.5	11.0		11.9		8.5	7.8		7.8	

would require removal of the boric acid as well; therefore, a very large amount of resin would be required because of the large amount of boric acid present.

Borate ions also can be removed indirectly, by treating the water with H^+-form cation exchange resin (HCR-S or IRC-50). The resin would remove the Na^+ ions from the water, replacing them with H^+ ions, which, in turn, would react with borate ions ($H_2BO_3^-$) to form neutral boric acid (H_3BO_3).

$$\text{Resin-H} + Na^+ + H_2BO_3^- \rightleftharpoons \text{Resin-Na} + H_3BO_3 \quad .$$

The borate ion concentration is related to the acidity (pH) by

$$H_3BO_3 \rightleftharpoons H^+ + H_2BO_3^- \ , \quad K = 5.8 \times 10^{-10} \quad .$$

From this relationship, the following equation can be derived:

$$[H_2BO_3^-] = 5.8 \times 10^{-10}\ [H_3BO_3]/[H^+] \ .$$

In the CB water, the concentrations are, approximately, 0.185 M total boron, 0.052 M Na^+, 0.052 M $H_2BO_3^-$, and 0.122 M neutral H_3BO_3 (0.185 - 0.052 = 0.122 M neutral H_3BO_3). Thus, the pH should be approximately 8.8, which is in agreement with the measurements. As the borate ions are converted to boric acid by H^+-form resin, the borate ion concentration is given approximately by the equation

$$[H_2BO_3^-] = 1 \times 10^{-10}/[H^+] = 1 \times 10^{-10}/10^{-pH} \quad .$$

Thus, to reduce the borate ion concentration by a factor of 100, one must increase the hydrogen ion concentration by a factor of 100, or

decrease the pH by 2. This, in turn, should increase the K_d for antimony with anion exchange resin by a factor of approximately 100.

Several tests were made in which the Na^+ ions were removed by means of either HCR-S or IRC-50 resin (H^+-form). When the resulting solution was contacted with SBR, large K_ds for antimony were achieved, as shown in Table 10. The extent of removal of the Na^+ ions (and the borate ions) is measured by the pH, as indicated. Since the K_d for antimony should be inversely proportional to the borate ion concentration, it should be directly proportional to the H^+ concentration. After addition of sufficient cation resin to reduce the pH from 8.7 to the range 6 to 7, the K_d was found to be

$$K_d = 4 \times 10^9 [H^+] = (4 \times 10^9)(10^{-pH}) = 4 \times 10^{(9 - pH)}.$$

Thus, the K_d is approximately 1200 at pH 6.5 and 2500 at pH 6.2.

These K_ds are in a practical range for a sorption process and indicate that antimony can be removed from the water by a simple modification of the SDS flowsheet. Essentially, the cation exchange column following the zeolite columns would be greatly increased in size to obtain sufficient capacity to remove Na^+ ions from the water and convert the borate ions to boric acid. The resulting water, at a pH <6, would flow to an anion exchange column (SBR) to remove the antimony. The pH would be maintained in the range of 6 to 6.5 in the anion column, although a lower pH might be acceptable.

The penalty for this modification would be the increased volume of relatively low-activity-level waste (the cation exchange resin). For example, 2650 m^3 (700,000 gal) of CB water at 1200 ppm Na^+ would require

Table 10. Effect of adjusting pH with cation resins

	Test 2-3A				Test 2-3B				Test 3-4A			
Resin	SBR				SBR				SBR			
Initial form	$H_2BO_3^-$				$H_2BO_3^-$				$H_2BO_3^-$			
Weight, g	1.0				1.0				1.0			
Feed source	IX1-35				IX1-35				IX1-32,37,38,39			
Treatment	pH adjusted to 7.0 with HCR-S (H^+) resin				pH adjusted to 3.0 with HCR-S (H^+) resin				pH adjusted to 6.0 with IRC-50 (H^+) resin			
Volume, mL	10				10				10			
	Conc. (µCi/mL)				Conc. (µCi/mL)				Conc. (µCi/mL)			
Key Radionuclides	Feed	Adj. feed	Supernate	K_d	Feed	Adj. feed	Supernate	K_d	Feed	Adj. feed	Supernate	K_d
^{90}Sr	2.6	1.7E-3	3.0E-2	--	2.6	3.1E-3	9.7E-4	21	2.4	3.7E-3	2.6E-3	3.9
^{106}Ru	1.2E-3	8.0E-4	1.2E-4	54	1.2E-3	1.1E-3	5.0E-5	2,200	1.5E-3	8.1E-4	3.2E-4	15
^{125}Sb	2.7E-2	2.7E-2	1.3E-3	210	2.7E-2	2.6E-2	1.7E-4	1,500	2.8E-2	3.0E-2	6.9E-4	420
^{137}Cs	4.0E-3	2.8E-4	1.9E-4	4.8	4.0E-3	3.5E-5	1.1E-5	23	5.7E-3	2.6E-4	1.6E-4	6.3
pH	8.6	7.0	7.3		8.6	3.0	6.4		8.6	6.0	7.0	

about 76 m^3 (20,000 gal) of HCR-S, or 38 m^3 (10,000 gal) of IRC-50 resin. A carboxylate resin (such as IRC-50) would probably be used because of its higher volumetric capacity, and it might be followed by a small amount of HCR-S in order to obtain a lower pH.

This modification appears to offer a practical way to remove a substantial fraction of the antimony (probably >99%). It depends on removal of the Na^+ ions, but not the boron, from the water. As a result, the pH is reduced. Since the ionic concentration of the water is greatly reduced, this could be considered a deionization, but not a demineralization. A side effect of the lower pH might be that the problem of recalcitrant cesium and strontium, as discussed earlier, would be alleviated.

Two other approaches for reducing the borate ion concentration also were tested. Simple acidification to reduce the pH to approximately 6 removes borate ion and substitutes for it the anion of the acid used. If the acid anion has a weaker affinity for the resin than the borate anion (less effective competition for the resin sites), then the K_d of antimony should increase. Several acids were tested, including formic, oxalic, and aminoacetic; however, optimum conditions were not attained and little success was achieved, as shown in Table 11. There is still some possibility that this approach might enhance antimony removal, but this was not pursued.

After the feed pH was adjusted with aminoacetic acid, several anion resins were compared with SBR, as shown in Table 12. The K_d for ^{125}Sb obtained with SBR was greater than that obtained with the other anion resins.

The other alternative is selective complexation of borate to form a different anion that might not compete with antimony as effectively for

Table 11. Effect of adjusting pH by acid addition

	Test 2-4A			Test 2-4B			Test 3-2A		
Resin	SBR			SBR			SBR		
Initial form	$H_2BO_3^-$			$H_2BO_3^-$			$H_2BO_3^-$		
Weight, g	1.0			1.0			1.0		
Feed source	IX1-36			IX1-36			IX1-32,37,38,39		
Treatment	pH adjusted to 7.0 with formic acid			pH adjusted to 7.0 with oxalic acid			pH adjusted to 7.9 with aminoacetic acid		
Volume, mL	10			10			10		
	Conc. (μCi/mL)			Conc. (μCi/mL)			Conc. (μCi/mL)		
Key radionuclides	Adj. feed	Supernate	K_d	Adj. feed	Supernate	K_d	Adj. feed	Supernate	K_d
^{90}Sr	3.1	2.9	0.8	3.6E-1	2.2	--	2.0	1.6	2.2
^{106}Ru	1.0E-3	3.6E-4	18	8.1E-4	<2.4E-4	≥24	9.5E-4	≤3.0E-4	≥22
^{125}Sb	2.6E-2	5.8E-3	35	2.2E-2	5.2E-3	31	1.9E-2	3.4E-3	45
^{123}Cs	4.0E-3	3.6E-3	1.1	3.2E-3	2.9E-3	1.1	3.8E-3	3.7E-3	0.3
pH	7.0	7.7		7.0	8.0		7.9	7.7	

Table 12. Comparison of other anion resins with SBR

	Test 3-2A				Test 3-2B		Test 3-2C	
Resin	SBR				Dowex-2		Ionac A580	
Initial form	$H_2BO_3^-$				$H_2BO_3^-$		$H_2BO_3^-$	
Weight, g	1.0				1.0		1.0	
Feed source	IX1-32,37,38,39				Same as in 3-2A		Same as in 3-2A	
Treatment	pH adjusted to 7.9 with aminoacetic acid				Same as in 3-2A		Same as in 3-2A	
Volume, mL	10				10		10	
	Conc. (μCi/mL)				Conc. of supernate (μCi/mL)		Conc. of supernate (μCi/mL)	
Key radionuclides	Feed	Adj. feed	Supernate	K_d		K_d		K_d
^{90}Sr	2.4	2.0	1.6	2.2	1.8	1.1	1.9	0.5
^{106}Ru	1.5E-3	9.5E-4	≤3.0E-4	≥22	≤3.2E-4	≥19	≤3.5E-4	≥17
^{125}Sb	2.8E-2	1.9E-2	3.4E-3	45	1.2E-2	5.5	1.4E-2	3.5
^{137}Cs	5.7E-3	3.8E-3	3.7E-3	0.3	3.5E-3	0.9	3.5E-3	0.9
pH	8.6	7.9	7.7		7.4		5.3	

resin sites. Many polyhydroxy componds complex borate, including carbohydrates. Among these, D-fructose is outstanding, and tests were made with it, as shown in Table 13. The pH was readily decreased into the desired range, indicating that the complex ion was formed. However, the K_d of antimony was not increased, suggesting that the complex anion itself competes effectively with antimony for the resin sites.

Complete demineralization (removal of both Na^+ ions and boric acid species) prior to anion exchange permits effective removal of antimony, but is accompanied by the generation of a very large volume of waste resin. This procedure was not tested per se, but it has been accomplished during at least part of the Epicor-II processing. Since deionization without boric acid removal permits effective removal of antimony, demineralization offers no advantage.

6.3.2 Recalcitrant species

Several different resins and water pretreatments were tested using aged IX1 effluent solution. Most experiments involved two successive 24-h equilibrations — the first with 20 mL of water and 2 g of resin and the second with 10 mL of the water from the first extraction equilibrated with 1 g of new resin. Later tests were designed to study particular aspects of the problem.

Strong-acid resin (HCR-S, in the H^+ form) reduced cesium by a factor >700, to a concentration near 10^{-5} µCi/mL (below the 10 CFR 20 concentration), as shown in Table 14. This removal of cesium was not expected; it apparently occurred because most of the recalcitrant cesium species was converted to ionic cesium during the aging time after test IX1 was completed. The

Table 13. Effects of borate complexation by D-fructose

	Test 3-3A				Test 3-3B		
Resin	SBR				SBR		
Initial form	$H_2BO_3^-$				$H_2BO_3^-$		
Weight, g	1.0				1.0		
Feed source	IX1-32,37,38,39				IX1-32,37,38,39		
Treatment	Addition of 450 mg of D-fructose				Addition of 600 mg of D-fructose		
Volume, mL	10				10		
	Conc. (μCi/mL)				Conc. (μCi/mL)		
Key radionuclides	Feed	Adj. feed	Supernate	K_d	Adj. feed	Supernate	K_d
^{90}Sr	2.4	2.5	2.0	2.2	2.5	2.2	1.1
^{106}Ru	1.5E-3	9.2E-4	≤3.5E-4	≥16	1.0E-3	≤4.1E-4	≥15
^{125}Sb	2.8E-2	2.7E-2	1.1E-2	25	2.7E-2	1.2E-2	12
^{137}Cs	5.7E-3	5.4E-3	5.4E-3	--	5.4E-3	5.2E-3	0.4
pH	8.6	6.55	7.4		6.15	7.0	

Table 14. Treatment of aged effluent from zeolite columns with organic cation resins

	Test 1-1					Test 1-4				
Stage	1			2		1			2	
Resin	HCR-S			HCR-S		IRC-50			IRC-50	
Initial form	H^+			H^+		H^+			H^+	
Weight, g	2.0			1.0		2.0			1.0	
Feed source	IX1-29			Stage 1 supernate		IX1-30			Stage 1 supernate	
Treatment	None			None		None			None	
Volume, mL	20			10		20			10	
	Conc. (μCi/mL)			Conc. (μCi/mL)		Conc. (μCi/mL)			Conc. (μCi/mL)	
Key radionuclides	Feed	Supernate	K_d	Supernate	K_d	Feed	Supernate	K_d	Supernate	K_d
^{90}Sr	2.4	1.6E-4	150,000	2.2E-4	--	2.3	4.3E-3	5,400	7.3E-4	49
^{106}Ru	1.1E-3	8.9E-4	2.8	5.4E-4	6.5	1.2E-3	8.7E-4	4.3	8.1E-4	0.7
^{125}Sb	2.0E-2	2.1E-2	--	1.9E-2	0.8	2.0E-2	2.1E-2	--	1.9E-2	1.1
^{137}Cs	4.1E-3	2.4E-5	1,600	$\leq$5.4E-6	$\geq$35	4.6E-3	2.8E-4	150	6.5E-5	33
pH	8.5	2.3		2.5		8.5	5.7		4.4	

resin also acidified the solution to a pH near 2; this acidification, coupled with the 2-d contact time, could have enhanced the conversion to an extractable species.

The strong-acid resin also reduced the strontium concentration to a level lower than the values obtained in column tests IX1, IX2, IX3, and IX6. This suggests that the acidification increased the fraction of strontium that was exchangeable. Aging also increased the extractable strontium by a small amount, as shown by the column tests. Strontium concentrations of approximately 2×10^{-4} µCi/mL were obtained; these were about a factor of 10 lower than the results obtained in test IX6. This reduction in the amount of recalcitrant strontium was significant, but was much smaller than that for cesium. The results suggest that some combination of methods (probably involving pH adjustment, aging, and possibly heating) can be found that will result in better strontium removal. However, such conditions can not be defined on the basis of existing data.

Weak-acid resin (IRC-50) was generally similar to HCR-S, but somewhat less effective, with respect to additional removal of both cesium and strontium, as shown in Table 14. This resin reduced the pH of the solution to approximately 5, compared to a pH near 2 for strong-acid resin (HCR-S). The decreased effectiveness for removing recalcitrant cesium and strontium may be related to the lower acidity (higher pH), since a higher acidity (lower pH) would be expected to solubilize some insoluble material and aid in desorption of adsorbed ions. In both the weak- and strong-acid resin tests, an excess of resin was used, and the solution was effectively deionized (sodium ions were removed and borate ions were converted mostly to neutral boric acid).

Two modifications of the feed were tested for their effect on exchange with strong-acid resin. Preacidification of the feed with nitric acid to pH 2.5 resulted in a solution pH <2 after equilibration with the resin. This high acidity caused a somewhat lower K_d for both cesium and strontium, as shown in Table 15, because of the increased competition for resin sites. However, the amount of recalcitrant cesium and strontium (which could not be removed by ion exchange) was essentially the same as that for similar experiments without preacidification. The effect of time at the lower pH was not tested.

Additions of small amounts of lanthanum (1 and 10 ppm) to the feed solution prior to ion exchange treatment appeared to have no significant effect, as shown in Table 15. In other situations,[7] in which trace radioactivity was adsorbed on surfaces, the addition of lanthanum enhanced the release of radionuclides from the surfaces to the solution (the lanthanum adsorbs more strongly, displacing the elements previously adsorbed). In this test, however, no improvement was observed.

Filtration of the IX1 effluent solution through a 0.1-μm Millipore filter prior to the distribution measurements did not improve cesium and strontium removal. In fact, this procedure may have reduced the amount of strontium that was removed, as shown in Table 16. If the recalcitrant species were associated with particulates that could be removed by such filtration, the combined treatment of filtration followed by ion exchange should reduce these contaminants to much lower concentrations than ion exchange alone. No such improvement was observed. It is concluded that if the recalcitrant species are associated with particulates, the particles will pass through a 0.1-μm filter.

Table 15. Effect of various pretreatments on cation exchange

	Test 1-6				Test 1-7			Test 1-8		
Resin	HCR-S				HCR-S			HCR-S		
Initial form	H^+				H^+			H^+		
Weight, g	2.0				2.0			2.0		
Feed source	IX1-31				IX1-33			IX1-33		
Treatment	pH adjusted to 2.5 with nitric acid				Addition of $La(NO_3)_3$ to 1 ppm La^{+3}			Addition of $La(NO_3)_3$ to 10 ppm La^{+3}		
Volume, mL	20				20			20		
	Conc. (µCi/mL)				Conc. (µCi/mL)			Conc. (µCi/mL)		
Key radionuclides	Feed	Adj. feed	Supernate	K_d	Feed	Supernate	K_d	Feed	Supernate	K_d
^{90}Sr	2.7	--	1.7E-3	16,000	2.8	4.2E-4	66,000	2.8	2.5E-4	110,000
^{106}Ru	7.6E-4	--	8.4E-4	--	8.7E-4	7.3E-4	1.9	8.7E-4	7.0E-4	2.3
^{125}Sb	2.0E-2	--	2.0E-2	--	2.1E-2	2.1E-2	--	2.1E-2	1.9E-2	1.3
^{137}Cs	3.8E-3	--	1.8E-4	390	3.4E-3	2.4E-5	1,400	3.4E-3	2.7E-5	1,200
pH	8.5	2.5	1.8		8.5	2.4		8.5	2.4	

Table 16. Effect of feed filtration through 0.1-μm Millipore

	Test 1-1			Test 1-5		
Resin	HCR-S			HCR-S		
Initial form	H^+			H^+		
Weight, g	2.0			2.0		
Feed source	IX1-29			IX1-31		
Treatment	None			Feed filtered through 0.1-μm Millipore[a]		
Volume, mL	20			20		
	Conc. (μCi/mL)			Conc. (μCi/mL)		
Key radionuclides	Feed	Supernate	K_d	Feed[b]	Supernate	K_d
^{90}Sr	2.4	1.6E-4	150,000	2.7	2.6E-4	100,000
^{106}Ru	1.1E-3	8.9E-4	2.8	7.6E-4	5.4E-4	4.0
^{125}Sb	2.0E-2	2.1E-2	--	2.0E-2	2.1E-2	--
^{137}Cs	4.1E-3	2.4E-5	1,600	3.8E-3	3.8E-5	2,000
pH	8.5	2.3		8.5	2.5	

[a] Filter read >5 x 10^4 cpm beta and 150 mR/h gamma at 0.5 in.

[b] Before filtration.

6.3.3 Hydrolyzed and insoluble species

Several metals (Ce, Co, Zr, Nb, etc.), that can not be effectively removed in the SDS process were not studied explicitly. These metals are expected to hydrolyze and exist as hydrous oxides or in association witn other insoluble material. It is also possible that some colloidal particles are present.

Two series of ultracentrifuge tests were made with the IX5 column effluent solution. The effluent water was subjected to 48,000 g for 3 h in one test and to 150,000 g for 4 h in the other. The results were somewhat imprecise because of the low activities of the radionuclides of interest and the much higher level of other isotopes, notably ^{125}Sb. The results suggested that the following fractions of the activities were removed from the water and deposited in the centrifuge cones: strontium, ruthenium — 30 to 35%; niobium — 25%; cerium, cobalt, cesium — 10 to 20%; antimony — <0.3%. Identical centrifuge cones, which were similarly exposed to the same water but not centrifuged, did not retain significant activity; thus, the radioactivity retained in the cones was the result of the centrifugation and not merely adsorption.

These results clearly show that a substantial fraction of the radioactivity of the ion exchange effluent solutions is present in a form that can be removed from the water by extreme centrifugation. Thus, colloidal material appears to exist, and the associated radionuclides apparently are not in rapid equilibrium with ionic species. However, the exact nature of the material is not known.

7. EXPECTED PERFORMANCE OF THE SUBMERGED DEMINERALIZER SYSTEM

Based on the results of the column tests, the expected concentrations of radionuclides in the decontaminated effluent stream from the SDS after treatment of CB water were estimated and are shown in Table 17. The total volume of product water accumulated after 200 bed volumes of throughput (based on the resin volume in each zeolite bed) is expected to have ^{90}Sr and ^{137}Cs concentrations that are slightly lower than the instantaneous concentrations in the product stream. These total product-water concentrations are estimated to be 1.0×10^{-3} μCi/mL of ^{90}Sr (3300 times greater than the 10 CFR 20 concentration) and 1.2×10^{-3} μCi/ml of ^{137}Cs (60 times greater than the 10 CFR 20 concentration).

The projections shown in Table 17 are based on the most pessimistic test results — the zeolite effluent concentration from test IX6 after 200 bed volumes and an additional DF of 2 for all nuclides except ^{125}Sb in the cation, anion, and mixed resin beds downstream of the third zeolite column. The ^{125}Sb also will be removed initially, until all of the H^+-form cation resin has been converted to the Na^+ form, but this effect will not be significant, overall. Thus, the most concentrated radioactive component in the effluent from the polishing bed, other than tritium, will be ^{125}Sb; however, in terms of the relative hazard, ^{90}Sr will be the major concern and will be the key factor for determining the amount of dilution that will be required, in order to meet the 10 CFR 20 concentrations.

The expected concentrations of key radionuclides in the solid wastes (loaded sorbents and filter solids, not including filter aid) from SDS operations are shown in Table 18. The zeolite beds, when removed from the

Table 17. Expected activity concentrations[a] in SDS process streams after 200 bed volumes through each zeolite bed

(Based on continuous flow through three zeolite columns)

Nuclide	Feed and effluent concentrations,[a] µCi/mL							Prod. Conc. x 10 CFR 20[b]
	Feed	Filter	Zeolite columns			Cation column	Polishing column (prod.)	
			First	Second	Third			
^{3}H	1.0	1.0	1.0	1.0	1.0	1.0	1.0	330
^{60}Co	c	c	6E-5	6E-5	6E-5	6E-5	6E-5	0.1
^{89}Sr	5.3E-1[d]	5.2E-1[d]	6.6E-3	6E-4	5.9E-4	5.2E-4	3.0E-4	100
^{90}Sr	2.29[d]	2.26[d]	3.2E-2	2.8E-3	2.7E-3	2.4E-3	1.4E-3	4500
^{95}Nb	c	c	1.9E-5	1.0E-5	1.0E-5	1.0E-5	1.0E-5	0.1
^{103}Ru	c	c	2.9E-5	2.4E-5	2.4E-5	2.4E-5	1.2E-5	0.2
^{106}Ru	c	c	2.4E-3	2.0E-3	2.0E-3	2.0E-3	1.0E-3	100
^{125}Sb	c	c	1.9E-2	1.9E-2	1.9E-2	1.9E-2	1.9E-2[e]	200
^{134}Cs	2.62E+1	2.62E+1	2.4E-3	5.3E-4	5.0E-4	5.0E-4	2.5E-4	30
^{137}Cs	1.56E+2	1.56E+2	1.4E-2	3.3E-3	3.1E-3	3.1E-3	1.6E-3	80
^{144}Ce	c	c	4.7E-4	4.7E-4	4.7E-4	4.7E-4	2.4E-4	25

[a]In µCi/mL as of July 1, 1980.
[b]Multiples of concentrations listed in 10 CFR 20, Appendix B, Table II, Column 2.
[c]Not detected.
[d]Differences in strontium concentrations between feed and filter effluent based on estimate of 500 gal of solids in 700,000 gal of water.
[e]Concentration lower initially (until cation beds become loaded with sodium).

Table 18. Expected activity concentrations[a] in SDS solid wastes after 200 bed volumes through each zeolite bed

Key radionuclides	Concentrations,[a] µCi/mL							
	Filtered solids	Zeolite beds			Cation bed	Polishing bed		
		First	Second	Third		Cation	Anion	Mixed
^{90}Sr	3.8E+1	5E+2	5	5E-2	<1E-1	<2E-1	<4E-1	<3E-2
^{106}Ru	7.6E-1	1E-1	5.4E-2	3.3E-2	1.2E-2	1.8E-3	4.4E-2	6.0E-6
^{125}Sb	1.5	5E-2	3.8E-2	2.9E-2	7.2E-2	6.0E-3	1.1E-1	3.0E-3
^{134}Cs	8.2E-1	5.2E+3	4.9E-2	5.3E-2	<2E-4	<3E-5	<9E-5	1.3E-5
^{137}Cs	4.7	3.1E+4	2.9E-1	3.0E-1	3.5E-4	1.2E-5	5.9E-5	6.4E-5

[a] In µCi/mL as of July 1, 1980.

first position, will contain most of the activity. Based on the loading profile shown in Fig. 7, the activity will be present predominantly in the upper one-fourth of the bed. Therefore, the maximum concentrations will be about four times greater than the average concentrations shown here (e.g., approximately 1.2×10^5 μCi/mL of ^{137}Cs).

8. IMPLICATIONS FOR CLEANUP

8.1 Containment Building Water

The data obtained permits a reasonable definition of the minimum performance to be expected from the SDS system and from a modification in the flowsheet so as to remove ^{125}Sb. If the SDS is modified by using enough H^+-form cation resin to completely remove the Na^+ ions from the water and convert the borate ions to weakly ionized boric acid prior to anion exchange, the ^{125}Sb concentration can be reduced by a factor of at least 100. Since the total amount of ^{125}Sb present is approximately 50 Ci and a limit of 10 Ci may be applied to storage of the decontaminated water, at least a fivefold reduction of the ^{125}Sb may be necessary.

The primary problem in obtaining further decontamination of the water from strontium and cesium is associated with recalcitrant species, and the ability to overcome the problem is limited by an inadequate understanding of the basic nature of these species. Some indications of appropriate treatment were obtained during the tests (e.g., the additional DFs obtained after aging between tests IX1 and IX2). However, there is no definitive information that the problem of the recalcitrant species can be substantially alleviated, and there is no firm technology on which a superior ion exchange process can be based.

It is likely that aging of the decontaminated water, especially at the optimum pH and possibly at an elevated temperature, will permit further decontamination, although there are no data to support this supposition other than the chance observations made during this study. It should be clearly understood that if the processed water is immediately run through the SDS process for a second time, there will be very little additional decontamination. If a substantial additional DF is to be achieved, the nature of the recalcitrant cesium and strontium species will have to be changed. This general area represents the primary remaining uncertainty.

8.2 Reactor Primary Coolant System Water

The RCS is a recirculating loop that can not be drained because it must always contain a substantial volume of water in order to cover the core. Thus, the RCS water must be decontaminated in a recirculation or by-pass mode, as opposed to once-through operation. Also, the boric acid and sodium borate concentrations in the RCS must be held constant to prevent criticality and to maintain the pH at a sufficiently high level to prevent corrosion. Thus, modifying the SDS to reduce the concentrations of the minor contaminants, ^{125}Sb and ^{106}Ru, can not be considered until after the fuel has been removed from the reactor. The objective of using the SDS to treat the RCS water will be to decrease the concentrations of cesium and strontium, which, in turn, will reduce exposure to personnel during fuel removal operations. Only the zeolite columns in the SDS will be needed for this purpose because zeolite will sorb the bulk of the cesium and strontium without affecting the boric acid and sodium borate concentrations. The time required to process the RCS water can be reduced

by increasing the amount of zeolite in the SDS; this can be done by replacing the cation column with a fourth zeolite column.

In the recirculating mode, only one theoretical stage of separation is possible for each batch of zeolite used, and this can be obtained only if the throughput volume is large enough to bring the batch of zeolite into equilibrium with the water in the entire RCS. In order to minimize the volume of zeolite used (and hence the volume of radioactive waste generated), the throughput of each column in each position should be at least 1000 bed volumes; after being moved through all four positions, each column will have accumulated a total throughput of 4000 bed volumes, which is equivalent to 2.7 volumes of the RCS.

8.3 Waste Volumes

A comparative estimation of the volume of waste (sorbents or evaporator concentrates) resulting directly from the processing of the CB water is summarized in Table 19 for several possible processing approaches. The modified SDS system (Case 2) would generate approximately 2.5 times as much waste sorbents as the basic SDS system (Case 1) because of the larger volume of cation resin required to remove the Na^+ ions. Elution and regeneration of this resin (Case 3) would offer no appreciable advantage in terms of waste volume; the disadvantages of regeneration would be the additional equipment and operational requirements. Evaporation of the zeolite column effluent (Case 4) would provide effective removal of non-ionic species of the radionuclides. A negative effect would be the production of a much larger volume of waste because of the large amount of boric acid that would be included in the evaporator concentrate.

Table 19. Estimated waste volumes[a] generated during the processing of the Containment Building water at TMI-2 using the SDS system

Case		Volume (gal)
1	Basic SDS flowsheet	
	Zeolite (containing cesium and strontium)	3,500
	Cation resin	1,000
	Mixed resin	500
	Total	5,000
2	SDS, modified for ^{125}Sb removal	
	Zeolite (containing cesium and some strontium)	1,000
	Cation resin (IRC-50, containing sodium and most of strontium)	10,500
	Anion resin (containing ^{125}Sb)	1,500
	Total	13,000
3	Same as Case 2 except includes elution of IRC-50 resin and evaporation of eluate to 22% solids	
	Zeolite (containing cesium and some strontium)	1,000
	Anion resin (containing ^{125}Sb)	1,500
	Evaporator concentrate[b] (containing sodium and most of strontium)	9,500
	Total	12,000
4	Basic SDS (zeolite columns only) plus evaporation of zeolite effluent	
	Zeolite (containing cesium and some strontium)	1,000
	Evaporator concentrate[c] [containing remaining radionuclides (except tritium), sodium, and boric acid]	65,000
	Total	66,000

[a]Volume of dewatered sorbents or evaporator concentrates from treating 700,000 gal of CB water. Waste solidification will increase these volumes by factors that depend on waste form.
[b]Evaporated to 22% sodium sulfate.
[c]Evaporated to 10 to 12% boric acid.

Decontamination of the RCS water also will generate a minimum of several thousand gallons of additional waste.

9. CONCLUSIONS AND RECOMMENDATIONS

Samples taken from the floor of the Containment Building have contained solids that are precipitates (probably hydroxides) of, primarily, Cu, Ni, Al, and Fe and contain a significant concentration of radiostrontium. The volume of solids in the building is highly conjectural; however, estimates indicate a volume of several hundred gallons. If the water is not clarified adequately, these solids could restrict or block the flow of water through the ion exchange columns. Filtration tests indicated that the best results can be achieved by using a downward flow through a filter housing in which sintered-metal filters rated at 40 μm are located at the bottom and are covered by several inches of Celite 535 (or equivalent) diatomaceous-earth filter aid. If filtration difficulties or restricted flows are encountered with the current SDS filters, use of the precoated, downward-flow filter should be considered.

The ion exchange column tests showed that cesium can be removed from the CB water by a factor of 10^4 for at least 1000 bed volumes. The operating procedure planned for the SDS (using three zeolite beds in series and moving the beds countercurrent to the water flow after every 200 bed volumes of throughput) will make possible a DF of 10^3 for strontium. Very little decontamination, if any, will be obtained in either the organic cation resin column or in the polishing column. The primary radionuclide in the SDS effluent will be ^{125}Sb, with a concentration of 2×10^{-2} μCi/mL. However, the primary hazard remaining in the effluent will be ^{90}Sr, with a

concentration 4500 times greater than the concentration listed in 10 CFR 20. If discharge limits are established, the SDS effluent could be diluted with routine plant discharges.

The ^{125}Sb was found to be anionic but poorly sorbed by the SDS anion resins because of competition by borate ion for the exchange sites. The SDS can be modified to enhance the removal of ^{125}Sb by passing the zeolite column effluent stream through a large bed of cation resin to remove the sodium ions and then passing the stream through an anion resin bed to sorb the ^{125}Sb. Amberlite IRC-50 is the best cation resin because of its relatively high capacity for sodium, and SBR is the best anion resin. This modification of the SDS will generate approximately 2.5 times as much solid wastes from CB water as the basic SDS flowsheet.

The remaining strontium and cesium are recalcitrant species which cannot be removed by ion exchange unless their chemical nature is changed. Simply recycling the effluent stream through the SDS column will not remove these species. The nature of the recalcitrant species may possibly be changed by altering the conditions of time, temperature, or pH; however, this is an area of uncertainty that should be studied if further work is done.

10. REFERENCES

1. R. R. Reust, CNSI/TMI Water Cleanup System Process Description, AGNS Draft Report, Allied-General Nuclear Services (August 1979).

2. Letter from B. C. Rusche to R. C. Arnold, "Submerged Demineralizer System Progress Review by the TMI Technical Advisory Group," dated May 27, 1980.

3. Title 10, Code of Federal Regulations, Part 20, Appendix B, Table II, Column 2.

4. W. N. Bishop, D. A. Nitti, N. P. Jacob, and J. A. Daniel, "Fission Product Release from the Fuel Following the TMI-2 Accident," Proceedings of the 1980 ANS/ENS Topical Meeting, Thermal Reactor Safety, American Nuclear Society, Knoxville, Tenn., April 1980.

5. J. D. Logue, Load Test of the CNSI-TMI Filter Elements, Allied-General Nuclear Services Report to Chemical Nuclear Services, Inc., TMI-II Recovery Project, Project No. 3009 (March 1980).

6. John H. Perry, Ed., Perry's Chemical Engineers' Handbook, 4th Edition, p. 5-47, McGraw-Hill, New York, 1963.

7. R. V. McCord and B. L. Corbett, High Flux Isotope Quarterly Report, July, August, and September of 1967, ORNL/TM-2078 (November 1967).

11. APPENDIX

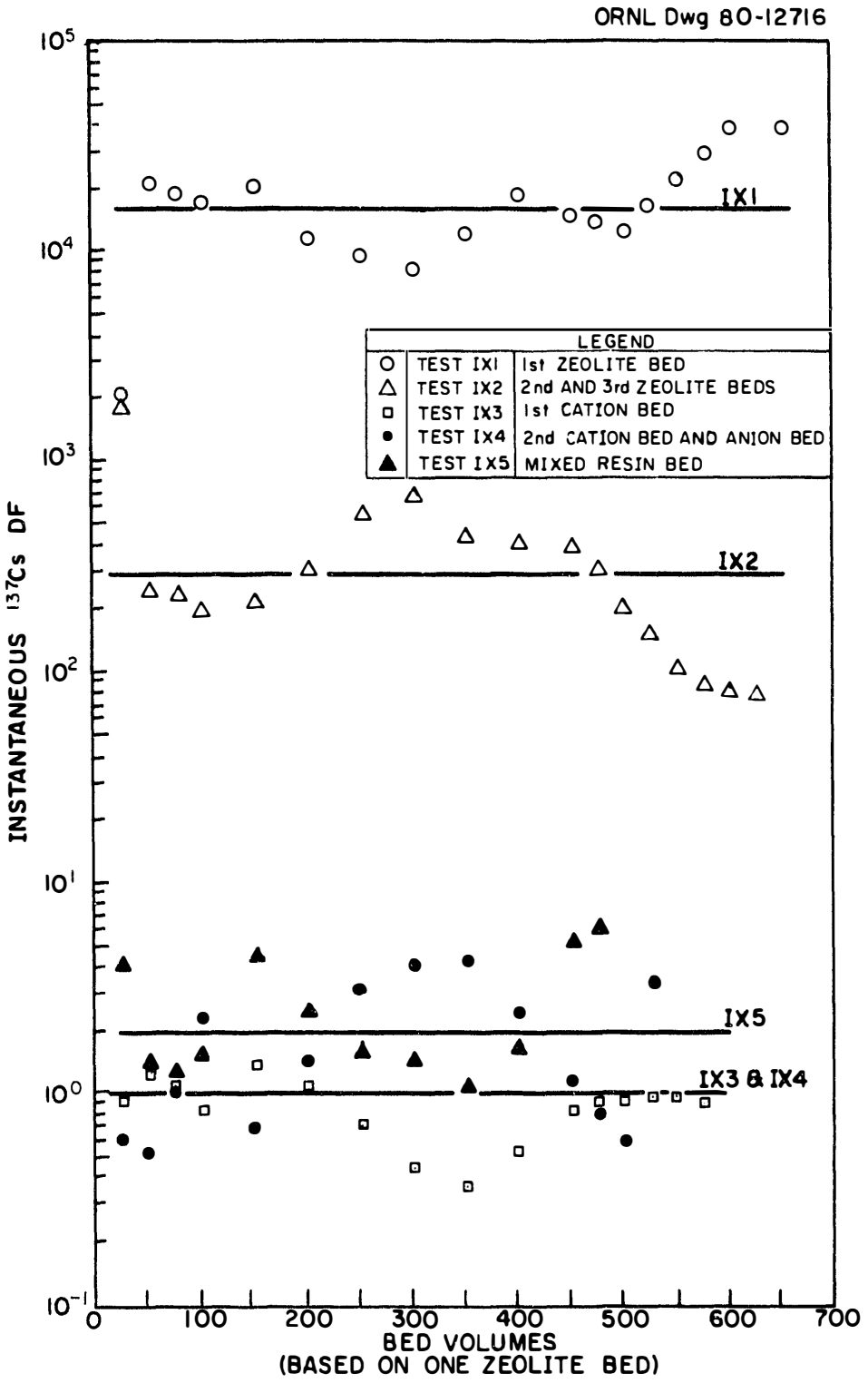

Fig. A-1. Instantaneous ^{137}Cs DFs for each test run. (Decontamination factors calculated from instantaneous concentrations in test run effluents relative to concentrations in test run feeds.)

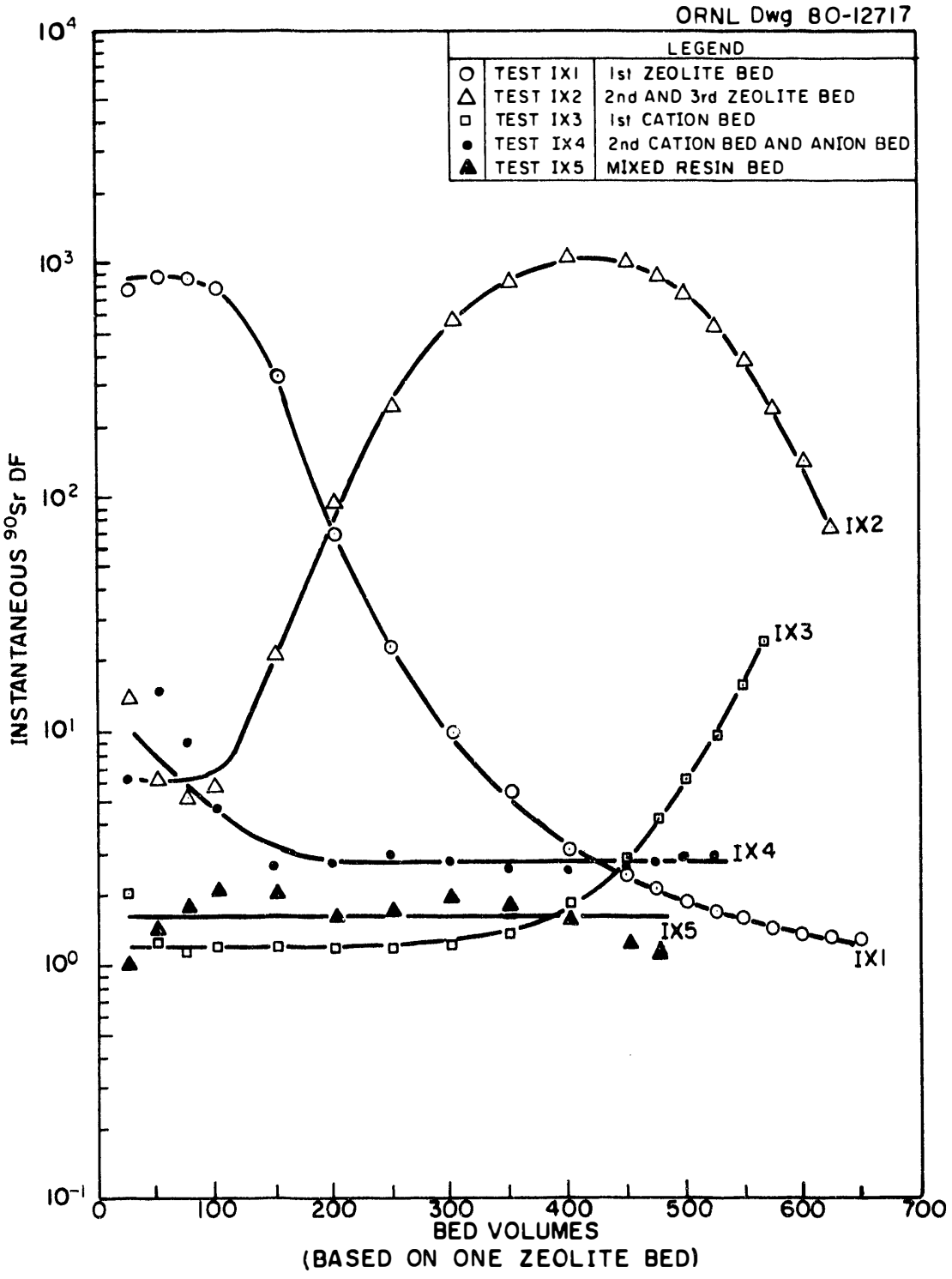

Fig. A-2. Instantaneous ^{90}Sr DFs for each test run. (Decontamination factors calculated from instantaneous concentrations in test run effluents relative to concentrations in test run feeds.)

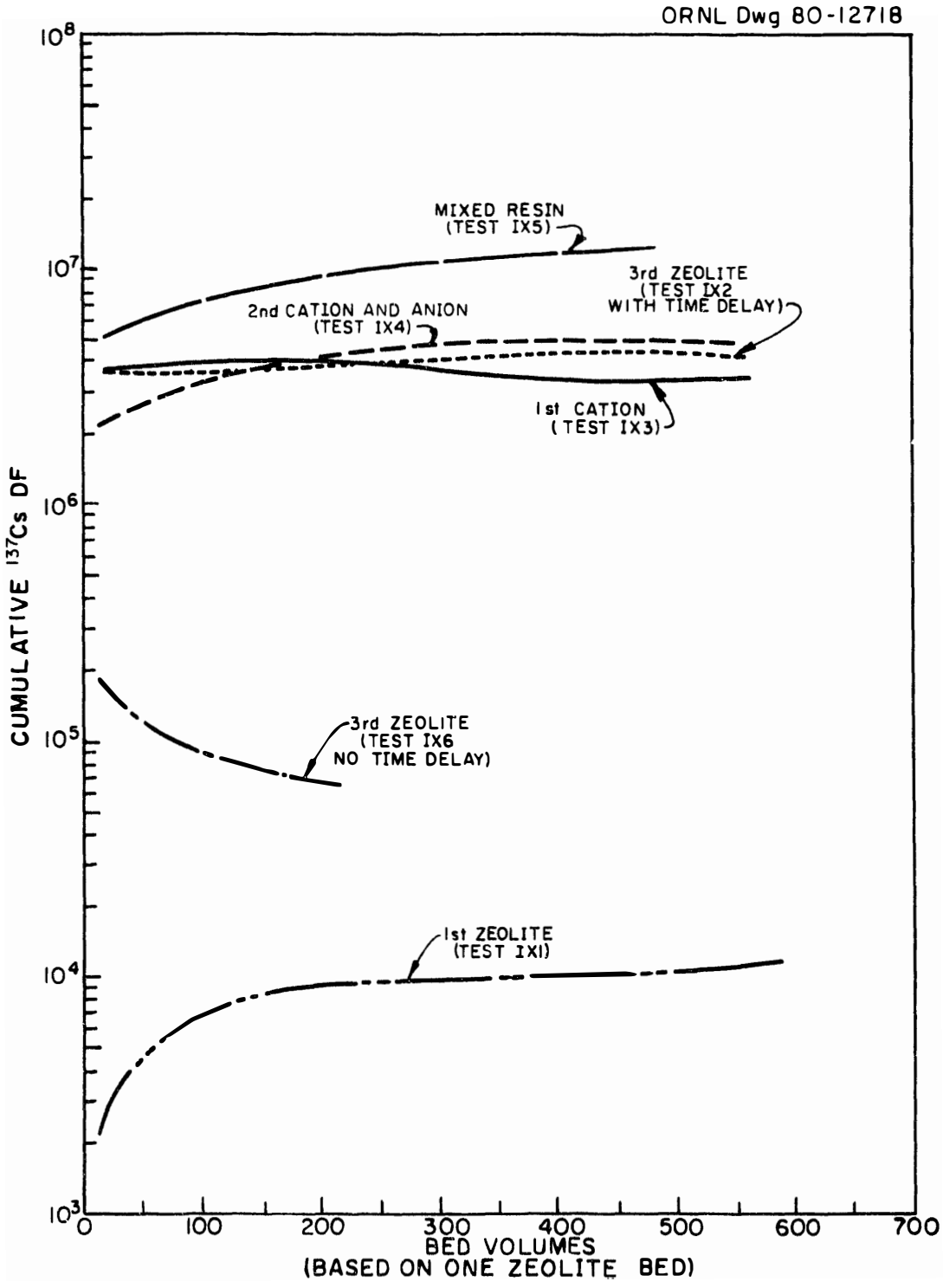

Fig. A-3. Cumulative ^{137}Cs DFs for column effluent streams. (Decontamination factors calculated from concentrations in accumulated column effluents relative to concentrations in CB water.)

ORNL Dwg 80-12719R

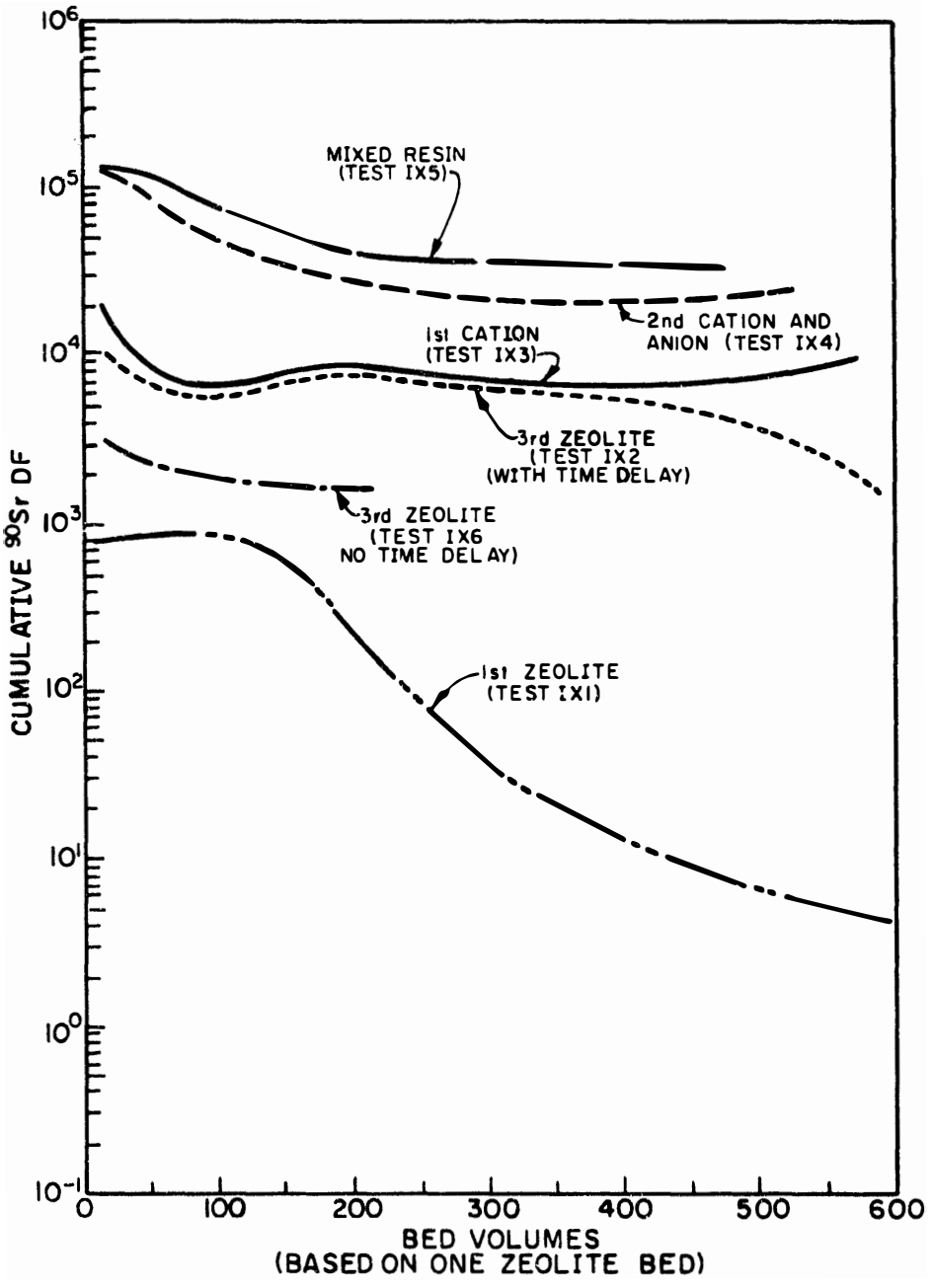

Fig. A-4. Cumulative ^{90}Sr DFs for column effluent streams. (Decontamination factors calculated from concentrations in accumulated column effluents relative to concentrations in CB water.)

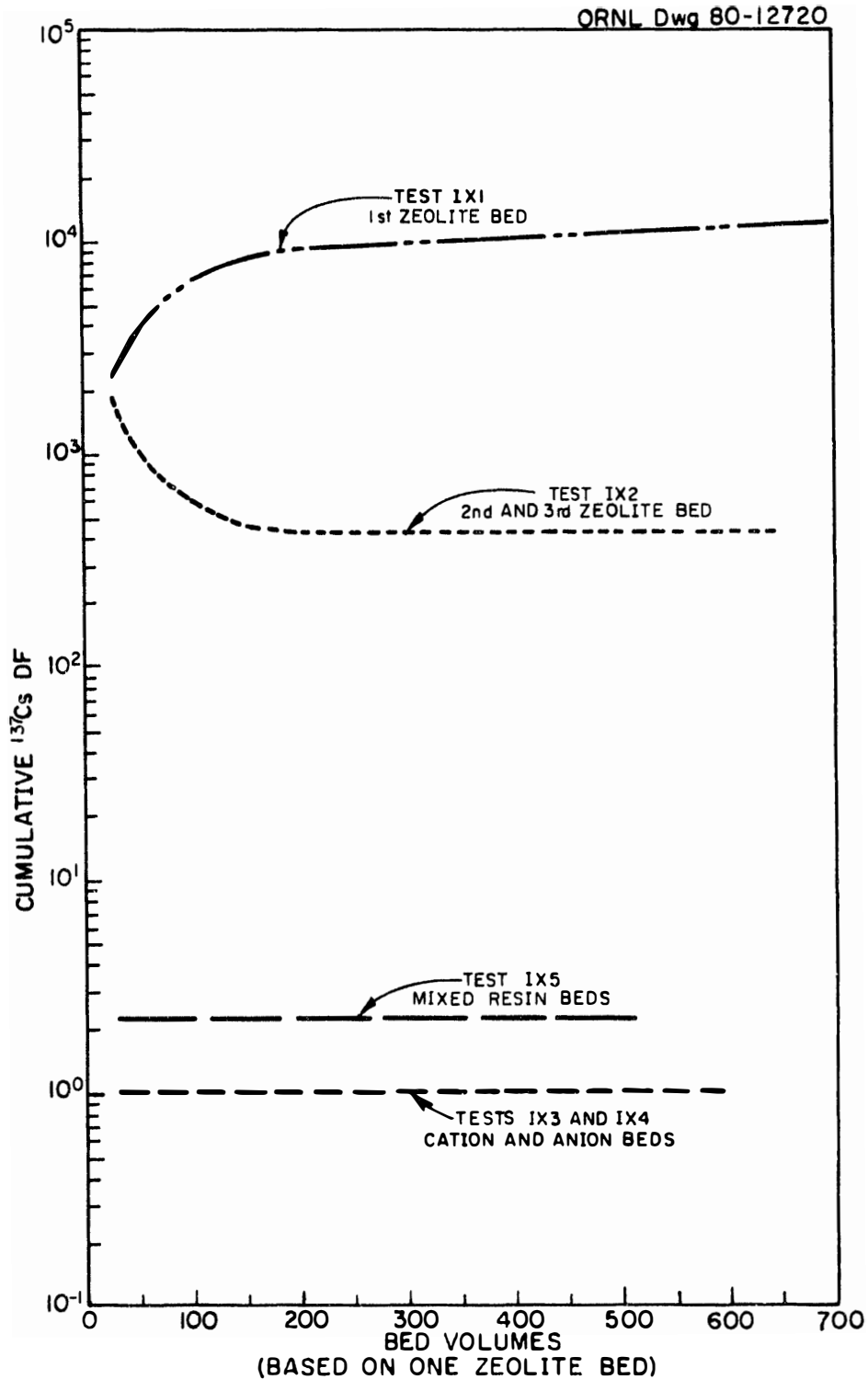

Fig. A-5. Cumulative ^{137}Cs DFs for each test run. (Decontamination factors calculated from concentrations in accumulated test run effluents relative to concentrations in cumulative test run feeds.)

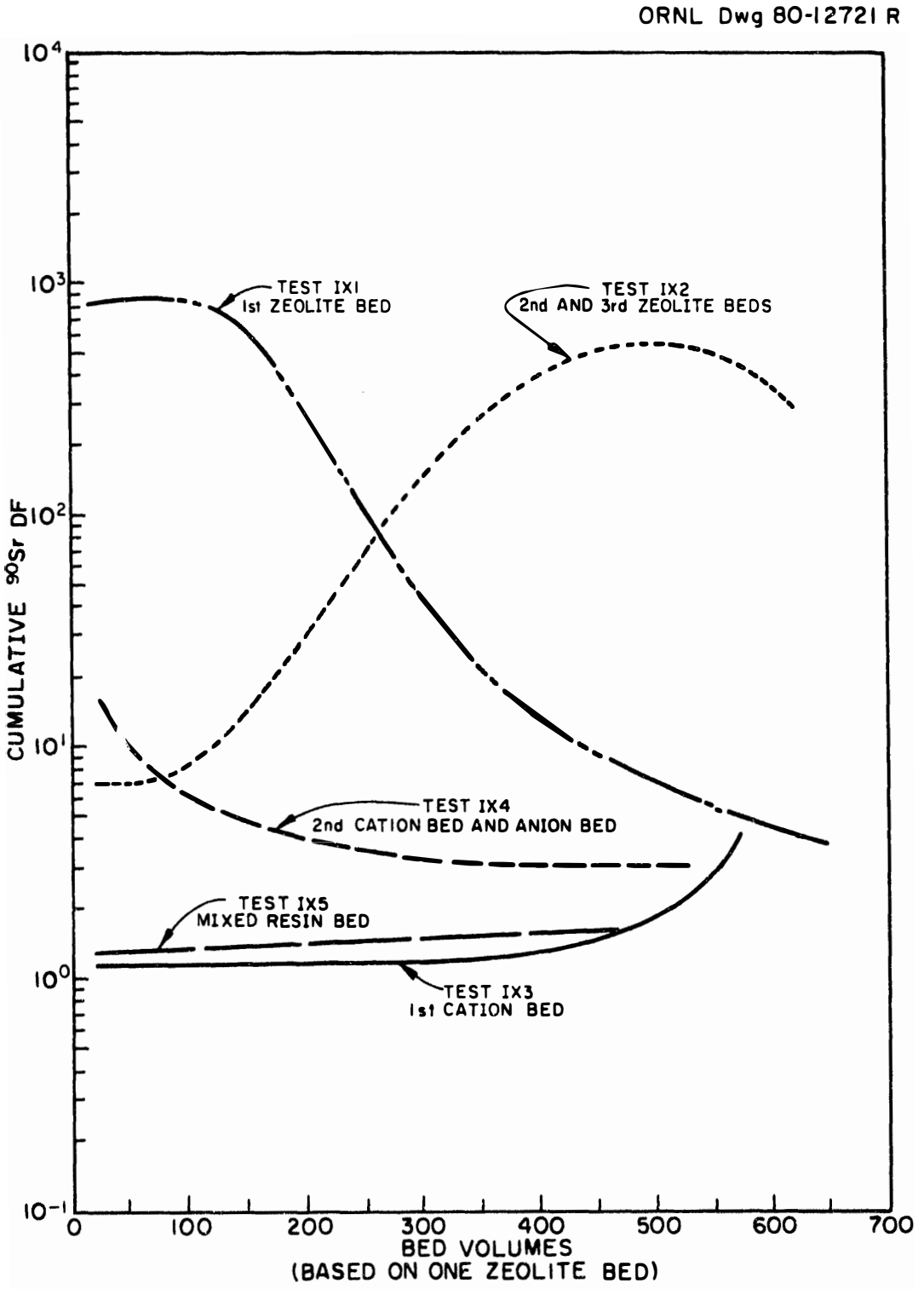

Fig. A-6. Cumulative ^{90}Sr DFs for each test run. (Decontamination factors calculated from concentrations in accumulated test run effluents relative to concentrations in cumulative test run feeds.)

Table A-1. pH of effluent fractions from ion exchange column tests

Test	Sample No. 1	2	4	6	8	10	14	16	20	28	39
TMI-IX1	8.6	8.6	8.6	8.6	8.6	8.6	8.6	8.6	8.6	8.6	8.6
TMI-IX2	8.6	8.6	8.6	8.6	8.6	8.6	8.6	8.6	8.6		
TMI-IX3	2.9	8.2	8.4	8.5	8.5	8.5	8.6	8.6	8.6		
TMI-IX4	Not Measured										
TMI-IX5	5.0	5.5	4.6	3.8	3.5	7.9	8.7	8.8	8.8		
TMI-IX6	8.6	8.6	8.6	8.6	8.6						

Table A-2. Measured radioactivity[a] and pH in Test TMI-IX1 (first zeolite bed)

Bed volumes[b] Sample No., IX1-	0 Feed	25 1	50 2	100 4	150 6	200 8	300 12	400 16	500 20	600 24	700 28	800 32	900 36	975 39
pH	8.6	8.6	8.6	8.6	8.6	8.6	—	8.6	8.6	—	8.6	—	—	8.6
Gross β, cpm/mL	1.81E8	1.16E6	1.30E6	1.30E6	1.47E6	1.61E6	2.20E6	3.69E6	5.85E6	7.35E6	9.09E6	9.14E6	9.65E6	9.80E6
Gross γ, cpm/mL	9.05E7	5.20E4	1.57E4	1.71E4	1.77E4	2.02E4	1.87E4	1.71E4	1.67E4	1.55E4	1.69E4	1.57E4	1.70E4	1.84E4
^{60}Co, μCi/mL	—	—	—	—	4.5E-5	—	7.1E-4	—	3.2E-4	—	—	—	—	—
^{89}Sr,[c] μCi/mL	6.17	7.9E-3	6.9E-3	7.6E-3	1.9E-2	7.9E-2	6.2E-1	1.8	3.3	4.5	5.0	5.4	5.4	6.0
^{90}Sr,[c] μCi/ml	2.26	2.9E-3	2.5E-3	2.8E-3	6.9E-3	3.2E-2	2.3E-1	6.6E-1	1.2	1.6	1.9	2.0	2.0	2.2
^{95}Zr, μCi/mL	—	—	—	—	5.1E-5	—	—	—	—	—	—	—	—	—
^{95}Nb, μCi/mL	—	—	—	—	1.3E-4	—	—	—	1.6E-4	1.0E-4	—	—	—	—
^{103}Ru, μCi/mL	—	—	4.4E-4	4.8E-4	2.6E-4	4.2E-4	4.1E-4	3.8E-4	3.4E-4	2.3E-4	2.6E-4	1.8E-4	1.7E-4	1.8E-4
^{106}Ru, μCi/mL	—	3.4E-3	3.0E-3	3.2E-3	3.0E-3	3.4E-3	3.0E-3	1.8E-3	2.1E-3	1.3E-3	8.1E-4	<6E-4	1.1E-3	1.3E-3
^{125}Sb, μCi/mL	—	2.0E-2	2.1E-2	2.2E-2	1.6E-2	2.3E-2	2.2E-2	2.1E-2	2.0E-2	2.0E-2	1.7E-2	1.9E-2	2.0E-2	2.0E-2
^{134}Cs, μCi/mL	3.10E1	1.5E-2	1.6E-3	2.0E-3	1.4E-3	2.8E-3	4.5E-3	1.8E-3	3.0E-3	8.3E-4	8.3E-4	6.6E-4	5.1E-4	9.0E-4
^{137}Cs, μCi/mL	1.56E2	7.2E-2	7.5E-3	8.9E-3	7.7E-3	1.4E-2	1.9E-2	8.1E-3	1.2E-2	4.0E-3	3.7E-3	3.2E-3	2.9E-3	4.2E-3
^{144}Ce, μCi/mL	—	—	—	—	4.9E-4	1.1E-3	—	—	—	—	—	—	—	—

[a]All values except gross β and gross γ are as of January 2, 1980.

[b]Based on bed volume of 2 mL.

[c]Strontium determinations by RCA; other nuclides determined by γ-scan.

Table A-3. Measured radioactivity[a] and pH in Test TMI-IX2 (second and third zeolite beds)

Bed volumes[b]	25	50	100	200	300	400	500	615
Sample No., IX2-	1	2	4	8	12	16	20	25
pH	8.6	8.6	8.6	8.6	8.6	8.6	8.6	—
Gross β, cpm/mL	8.56E3	1.42E4	1.29E4	4.25E4	1.88E5	3.94E5	5.97E5	8.79E5
Gross γ, cpm/mL	4.38E3	6.78E3	6.96E3	7.19E3	7.78E3	8.19E3	8.86E3	9.96E3
^{58}Co, μCi/mL	—	5.4E-5	6.2E-5	5.4E-5	6.2E-5	4.6E-5	6.76E-5	4.32E-5
^{60}Co, μCi/mL	—	4.9E-5	3.8E-5	3.5E-5	4.3E-5	4.9E-5	4.05E-5	4.32E-5
^{89}Sr,[c] μCi/mL	4.46E-4	9.08E-4	1.33E-3	1.47E-3	1.29E-3	1.68E-3	4.15E-3	5.37E-2
^{90}Sr,[c] μCi/mL	1.97E-4	4.02E-4	5.70E-4	6.24E-4	5.51E-4	7.27E-4	1.80E-3	2.33E-2
^{95}Zr, μCi/mL	Not Detected							
^{95}Nb, μCi/mL	<2.70E-5	2.70E-5	7.3E-5	5.66E-5	5.95E-5	3.51E-5	4.32E-5	1.76E-5
^{103}Ru, μCi/mL	8.10E-5	2.51E-4	2.51E-4	2.19E-4	1.89E-4	2.46E-4	2.30E-4	1.70E-4
^{106}Ru, μCi/mL	8.65E-4	1.24E-3	1.40E-3	1.27E-3	1.24E-3	1.11E-3	1.27E-3	1.05E-3
^{125}Sb, μCi/mL	1.32E-2	2.21E-2	2.00E-2	1.99E-2	2.10E-2	2.17E-2	2.31E-2	2.22E-2
^{129m}Te, μCi/mL	≤6.76E-4	≤5.14E-4	≤5.14E-4	≤5.40E-4	≤4.59E-4	≤5.40E-4	≤6.49E-4	5.00E-4
^{134}Cs, μCi/mL	<5.4E-5	<3.78E-5	<4.05E-5	1.62E-5	<3.78E-5	<4.05E-5	≤5.68E-5	≤5.40E-5
^{137}Cs, μCi/mL	<3.2E-5	<3.24E-5	4.32E-5	4.60E-5	<2.16E-5	<2.16E-5	<3.78E-5	≤4.86E-5
^{144}Ce, μCi/mL	<1.40E-4	3.78E-4	4.05E-4	3.78E-4	1.89E-4	3.78E-4	1.68E-4	2.05E-4

[a] All values except gross β and gross γ are as of January 2, 1980.

[b] Based on bed volume of one zeolite bed (2 mL).

[c] Strontium and tellurium determinations by RCA; all others by γ-scan.

Table A-4. Measured radioactivity[a] and pH in Test TMI-IX3 (HCR-S bed)

Bed volumes[b] Sample No., IX3-	25 1	50 2	100 4	150 6	250 10	350 14	450 18	550 22	570 23
pH	2.9	8.2	8.4	8.5	8.5	8.6	8.6	8.6	8.6
Gross β, cpm/mL	6.86E3	1.46E4	1.66E4	2.21E4	8.80E4	2.53E5	4.21E5	5.67E5	6.32E5
Gross γ, cpm/mL	3.70E3	6.67E3	7.00E3	7.02E3	7.36E3	7.88E3	8.22E3	8.99E3	9.03E3
^{58}Co, μCi/mL	2.16E-5	4.30E-5	6.2E-5	5.9E-5	5.95E-5	7.84E-5	5.95E-5	5.68E-5	5.95E-5
^{60}Co, μCi/mL	1.62E-4	3.20E-5	4.6E-5	4.1E-5	4.05E-5	4.32E-5	3.78E-5	3.51E-5	3.78E-5
^{89}Sr,[c] μCi/mL	2.76E-4	8.27E-4	1.21E-3	1.18E-3	1.15E-3	1.09E-3	1.24E-3	1.35E-3	1.39E-3
^{90}Sr,[c] μCi/mL	1.19E-4	3.52E-4	5.16E-4	5.03E-4	5.01E-4	4.71E-4	5.39E-4	5.87E-4	6.05E-4
^{95}Zr, μCi/mL	Not Detected								
^{95}Nb, μCi/mL	9.46E-6	4.3E-5	7.3E-5	7.0E-5	5.14E-5	3.78E-5	6.49E-5	2.70E-5	1.89E-5
^{103}Ru, μCi/mL	7.03E-5	2.05E-5	2.92E-4	2.38E-4	2.03E-4	2.24E-4	2.08E-4	1.57E-4	1.97E-4
^{106}Ru, μCi/mL	3.78E-4	1.08E-3	1.30E-3	1.32E-3	1.08E-3	1.16E-3	1.16E-3	1.11E-3	9.19E-4
^{125}Sb, μCi/mL	1.16E-2	2.18E-2	2.13E-2	2.14E-2	2.23E-2	2.26E-2	2.18E-2	2.23E-2	2.18E-2
^{129m}Te,[c] μCi/mL	≤3.51E-4	≤4.05E-4	≤5.40E-4	≤4.59E-4	≤5.14E-4	≤5.95E-4	≤5.40E-4	≤6.76E-4	4.92E-4
^{134}Cs, μCi/mL	<1.19E-5	<8.11E-6	<1.35E-5	<3.78E-5	<4.05E-5	<4.05E-5	≤1.35E-5	≤1.35E-5	≤4.60E-5
^{137}Cs, μCi/mL	<3.51E-5	<2.54E-5	<5.14E-5	<3.24E-5	<3.78E-5	<5.95E-5	≤4.05E-5	≤4.60E-5	≤5.14E-5
^{144}Ce, μCi/mL	6.49E-5	2.43E-4	3.78E-4	3.24E-4	3.51E-4	<4.86E-4	1.57E-4	1.40E-4	≤1.62E-4

[a]All values except gross β and gross γ are as of January 2, 1980.

[b]Based on bed volume of one zeolite bed (2 mL).

[c]Strontium and tellurium determined by RCA; other nuclides by γ-scan.

Table A-5. Measured radioactivity[a] in Test TMI-IX4 (second HCR-S and SBR bed)

Bed volumes[b]	25	50	100	150	250	375	500	520
Sample No., IX4-	1	2	4	6	10	15	20	21
pH	Not Measured							
Gross β, cpm/mL	2.02E3	7.70E2	1.04E3	7.93E3	1.55E4	1.71E4	1.78E4	1.82E4
Gross γ, cpm/mL	≤5	≤8	3.80E1	3.79E3	7.62E3	7.56E3	6.12E3	6.18E3
^{58}Co, μCi/mL	≤5.41E-6	≤5.41E-6	≤5.95E-6	—	—	—	—	—
^{60}Co, μCi/mL	≤5.41E-6	≤3.24E-6	≤4.05E-6	≤1.08E-5	—	—	—	—
^{89}Sr,[c] μCi/mL	≤5.40E-5	≤5.40E-5	≤2.70E-4	5.08E-4	4.57E-4	5.40E-4	5.08E-4	5.32E-4
^{90}Sr,[c] μCi/mL	≤2.70E-5	≤2.70E-5	≤1.08E-4	1.94E-4	1.73E-4	2.05E-4	1.94E-4	2.03E-4
^{95}Nb, μCi/mL	—	—	—	3.78E-5	≤5.14E-5	≤2.70E-5	≤2.70E-5	≤1.35E-5
^{103}Ru, μCi/mL	≤5.41E-6	≤8.11E-6	4.35E-5	1.05E-4	1.49E-4	1.35E-4	3.51E-4	1.40E-4
^{106}Ru, μCi/mL	≤1.62E-4	≤1.89E-4	2.03E-4	5.94E-4	4.32E-4	4.59E-4	2.97E-4	2.43E-4
^{125}Sb, μCi/mL	≤8.11E-6	≤8.11E-6	1.81E-5	1.72E-3	3.35E-2	3.51E-2	2.89E-2	2.94E-2
^{129m}Te,[c] μCi/mL	≤7.30E-5	≤8.11E-5	≤3.51E-5	≤1.00E-3	≤2.27E-3	≤1.89E-3	≤2.65E-3	≤1.84E-3
^{134}Cs, μCi/mL	1.03E-5	1.65E-5	≤1.08E-6	1.35E-5	—	—	—	—
^{137}Cs, μCi/mL	5.51E-5	5.68E-5	≤1.89E-6	4.86E-5	≤1.32E-5	≤1.14E-5	7.57E-5	≤1.35E-5
^{144}Ce, μCi/mL	≤1.08E-4	≤8.11E-5	≤7.03E-5	1.43E-4	—	—	—	—

[a]All values except gross β and gross γ are as of January 2, 1980.

[b]Based on bed volume of one zeolite bed (2 mL).

[c]Strontium and tellurium determinations by RCA; others by γ-scan.

Table A-6. Measured radioactivity[a] and pH in Test TMI-IX5 (mixed resin bed)

Bed volumes[b]	25	50	100	150	200	300	400	475
Sample No., IX5-	1	2	4	6	8	12	16	19
pH	5.0	5.5	4.6	3.8	3.5	7.9[c]	8.8	8.8
Gross β, cpm/mL	3.5E1	1.05E2	1.10E3	1.16E4	1.52E4	1.45E4	1.59E4	1.58E4
Gross γ, cpm/mL	≤5	7.2	2.94E2	6.12E3	7.56E3	6.84E3	6.72E3	6.53E3
^{58}Co, μCi/mL	Not Detected							
^{60}Co, μCi/mL	≤8.11E-6	≤8.11E-6	8.11E-6	—	—	—	—	—
^{89}Sr,[d] μCi/mL	≤8.11E-5	≤5.40E-5	1.65E-4	4.68E-4	3.40E-4	2.57E-4	2.84E-4	2.46E-4
^{90}Sr,[d] μCi/mL	≤2.70E-5	≤2.70E-5	6.22E-5	1.78E-4	1.30E-4	9.73E-5	1.11E-4	9.46E-5
^{95}Nb, μCi/mL	≤1.08E-5	≤1.35E-5	2.43E-5	—	—	—	—	—
^{103}Ru, μCi/mL	≤1.62E-5	2.16E-5	5.68E-5	7.57E-5	1.11E-4	1.24E-4	1.32E-4	2.65E-4
^{106}Ru, μCi/mL	≤4.86E-5	9.46E-5	2.35E-4	4.86E-4	3.51E-4	3.78E-4	4.32E-4	4.86E-4
^{125}Sb, μCi/mL	≤1.62E-5	≤2.16E-5	1.19E-3	2.76E-2	3.62E-2	3.19E-2	3.14E-2	2.92E-2
^{129m}Te,[d] μCi/mL	≤2.16E-4	≤2.70E-4	≤2.43E-4	1.78E-3	1.46E-3	1.03E-3	1.11E-3	1.08E-3
^{134}Cs, μCi/mL	6.76E-6	1.89E-5	≤1.35E-5	≤7.84E-5	≤6.49E-5	≤5.40E-5	≤5.68E-5	≤5.68E-5
^{137}Cs, μCi/mL	1.35E-5	3.51E-5	≤1.62E-5	8.11E-6	8.11E-6	≤8.11E-6	1.62E-5	≤8.11E-6
^{144}Ce, μCi/mL	≤2.70E-5	2.70E-5	9.19E-5	2.62E-4	≤1.35E-4	≤1.30E-4	1.38E-4	2.65E-4

[a]All values except gross β and gross γ are as of January 2, 1980.

[b]Based on bed volume of one zeolite bed (2 mL).

[c]Sample No. 10, taken after 250 bed volumes.

[d]Strontium and tellurium determined by RCA; others by γ-scan.

Table A-7. Measured radioactivity[a] and pH in Test TMI-IX6 (three zeolite beds)

Bed volumes[b] Sample No., IX6-	0 Feed	25 1	50 2	75 3	100 4	125 5	150 6	175 7	200 8
pH	8.6	8.6	8.6	8.6	8.6	8.6	8.6	8.6	8.6
Gross β, cpm/mL	1.74E8	3.24E5	5.44E5	5.97E5	7.04E5	7.17E5	7.55E5	7.65E5	7.70E5
Gross γ, cpm/mL	9.16E7	5.58E3	9.33E3	9.74E3	1.00E4	1.05E4	1.05E4	1.10E4	1.06E4
^{58}Co, μCi/mL	7.38E-2	3.24E-5	5.14E-5	4.32E-5	6.76E-5	7.30E-5	2.43E-5	5.14E-5	8.11E-5
^{60}Co, μCi/mL	2.70E-2	2.24E-5	4.32E-5	4.32E-5	4.32E-5	4.32E-5	4.37E-5	5.40E-5	5.68E-5
^{89}Sr,[c] μCi/mL	8.49	2.62E-3	4.22E-3	5.76E-3	5.58E-3	5.24E-3	5.14E-3	5.54E-3	6.92E-3
^{90}Sr,[c] μCi/mL	3.32	1.03E-3	1.65E-3	2.24E-3	2.16E-3	2.05E-3	2.00E-3	2.16E-3	2.70E-3
^{95}Nb, μCi/mL	1.24E-1	6.49E-5	1.76E-4	2.19E-4	2.00E-4	1.89E-4	2.81E-4	1.86E-4	2.11E-4
^{103}Ru, μCi/mL	8.65E-1	2.03E-4	3.78E-4	5.94E-4	3.78E-4	4.86E-4	6.76E-4	4.59E-4	5.40E-4
^{106}Ru, μCi/mL	1.14	8.65E-4	1.46E-3	1.51E-3	1.76E-3	1.97E-3	2.35E-3	2.08E-3	1.94E-3
^{110m}Ag, μCi/mL	4.86E-2	4.86E-5	2.97E-5	6.22E-5	1.03E-4	1.00E-4	7.57E-5	9.73E-5	8.11E-5
^{125}Sb, μCi/mL	5.78E-1	1.81E-2	2.73E-2	2.89E-2	2.89E-2	2.86E-2	2.86E-2	2.92E-2	2.92E-2
^{134}Cs, μCi/mL	3.40E1	1.30E-4	3.08E-4	4.59E-4	4.49E-4	5.14E-4	6.30E-4	6.30E-4	5.92E-4
^{137}Cs, μCi/mL	1.65E2	9.08E-4	1.57E-3	2.17E-3	2.42E-3	2.62E-3	3.08E-3	3.30E-3	3.11E-3
^{144}Ce, μCi/mL	7.84E-1	2.16E-4	4.32E-4	5.67E-4	6.49E-4	5.67E-4	6.22E-4	6.76E-4	7.30E-4

[a]All volumes except gross β and gross γ are as of January 2, 1980.

[b]Based on bed volume of one zeolite bed (2 mL).

[c]Strontium determinations by RCA; other nuclides determined by γ-scan.

Table A-8. Elemental analyses in Test TMI-IX1 (first zeolite bed)

Bed volumes[a]	0	25	50	100	150	200	300	400	700	995
Sample No., IX1-	Feed	1	2	4	6	8	12	16	28	39
pH	8.6	8.6	8.6	8.6	8.6	8.6	8.6	8.6	8.6	8.6
Elements,[b] μg/mL										
Aluminum	1	2	2	0.5	2	2	2	4	0.4	1
Boron	2500	1500	~700	1500	~3000	1700	2000	~500	2800	2400
Barium	≤0.1	0.3	0.5	0.6	0.6	≤0.07	0.6	≤0.1	≤0.3	≤0.1
Calcium	30	30	40	90	90	20	30	30	20	30
Cobalt	≤0.2	≤0.2	≤0.2	≤0.2	≤0.2	≤0.1	≤0.2	≤0.2	≤0.2	≤0.1
Chromium	1	0.7	1	1	0.8	0.5	0.6	1	0.6	0.2
Cesium	0.8	≤0.03	≤0.04	≤0.06	≤0.08	≤0.04	≤0.04	≤0.02	≤0.02	≤0.02
Copper	0.5	≤0.2	0.7	0.4	0.3	0.2	0.4	≤0.3	≤0.1	0.5
Iron	1	0.9	1	1	0.8	0.4	2	0.5	≤0.5	0.5
Potassium	7	5	2	3	2	3	20	7	3	9
Magnesium	7	20	30	40	50	5	10	20	10	7
Manganese	≤0.2	≤0.2	≤0.2	≤0.2	≤0.2	≤0.2	≤0.2	≤0.1	≤0.2	≤0.2
Molybdenum		3	1		3	2	2	3	2	2
Sodium	≥1000	≥1000	≥1000	≥1000	≥1000	≥1000	≥1000	≥1000	≥1000	≥1000
Nickel	≤0.3	≤0.2	≤0.2	0.4	0.2	≤0.1	≤0.2	≤0.1	≤0.1	0.1
Phosphorus	0.6	0.5	0.4	0.6	0.3	0.1	0.2	0.2	0.07	0.5
Rubidium	0.6	≤0.03	≤0.06	≤0.05	≤0.04	≤0.05	≤0.03	≤0.04	≤0.06	0.1
Silicon	30	20	30	60	50	10	20	30	5	10
Strontium	≤0.1	0.1	0.6	≤0.1	0.4	≤0.03	≤0.2	≤0.1	≤0.1	0.1
Zinc	≤0.3	0.3	0.4	0.4	0.5	0.1	1	≤0.2	≤0.1	6

[a]Based on bed volume of 2 mL.

[b]Determined by spark-source mass spectrographic analysis.

Table A-9. Elemental analyses in Tests TMI-IX2, TMI-IX3, TMI-IX4, and TMI-IX5[a]

Test	IX2			IX3			IX4			IX5		
Bed volumes[b]	25	300	615	25	250	570	25	250	500	25	200	475
Sample No., IX	2-1	2-12	2-25	3-1	3-10	3-23	4-1	4-10	4-20	5-1	5-8	5-19
pH	8.6	8.6	8.6	2.9	8.5	8.6	—	—	—	5.0	3.5	8.8
Elements,[c] μg/mL												
Aluminum	0.3	0.7	1	0.2	1	2	0.5	1	0.4	0.5	0.5	0.6
Boron	700	1000	300	300	300	1000	1000	1000	1000	20	1000	1000
Barium	0.04	0.04	≤0.2	0.05	≤0.03	≤0.3	0.5	—	—	—	—	—
Calcium	20	10	10	8	7	10	50	50	4	5	10	7
Cadmium	≤0.05	≤0.06	≤0.4	≤0.04	≤0.2	≤0.7	—	—	—	—	—	—
Chlorine	10	6	5	8	5	20	5	20	5	5	10	7
Cobalt	≤0.02	0.05	≤0.1	≤0.02	≤0.02	0.3	—	—	—	—	—	—
Chromium	0.1	0.2	1	0.2	≤0.05	2	0.3	1	0.1	1	0.3	0.2
Cesium												
Copper	0.05	0.06	0.4	0.04	0.2	0.5	≤0.2		≤0.1	≤0.1	—	≤0.3
Iron	0.2	0.2	0.5	0.6	0.8	0.9	0.7	2	3	0.3	2	1
Indium	≤0.01	≤0.01	≤0.1	≤0.02	≤0.04	≤0.2	—	—	—	—	—	—
Potassium	0.5	1	1	0.5	1	1	2	5	0.5	0.4	0.7	1
Magnesium	20	10	5	0.3	5	20	≤0.5	10	≤0.5	≤0.5	≤1	≤1
Manganese	0.01	0.02	<0.1	0.02	0.07	0.3	—	—	—	—	—	—
Molybdenum	1	2	2	1	2	4	—	—	—	—	—	—
Nickel	0.05	0.09	0.3	0.07	0.2	0.7	≤0.3	0.6	≤0.3	≤0.2	1	≤0.1
Phosphorus	0.1	0.2	0.3	0.1	0.2	1	0.2	0.3	0.1	0.2	0.1	0.2
Rubidium												
Silicon	30	20	30	30	20	20	40	50	40	50	10	40
Silver	1	≤0.06	≤0.3	0.07	≤0.2	≤0.2	—	—	—	—	—	—
Sodium	≥1000	∿1000	∿300	∿200	∿1000	∿1000	∿100	∿1000	∿1000	70	∿100	∿1000
Sulfur	5	20	20	6	20	30	7	20	10	7	10	10
Strontium	≤0.02	0.03	0.2	≤0.02	0.2	0.3	—	—	—	—	—	—
Yttrium	≤0.2	≤0.2	≤0.5	≤0.1	≤1	≤0.5	1	2	0.4	—	—	1
Zinc	0.07	0.09	0.2	0.07	0.2	0.5	0.3	≤0.5	1	≤0.1	≤0.2	≤0.2
Zirconium	—	—	≤0.5	—	—	≤0.4	—	—	—	—	—	—

[a]TMI-IX2 - second and third zeolite beds; TMI-IX3 - HCR-S bed; TMI-IX4 - second HCR-S and SBR bed; TMI-IX5 - mixed resin bed.

[b]Based on the volume of one zeolite bed (2 mL).

[c]Determined by spark source mass spectrographic analysis.

Table A-10. Elemental analyses in Test TMI-IX6 (three zeolite beds)

Bed volumes[a] Sample No.	0 Feed	25 IX6-1	100 IX6-4	200 IX6-8
pH	8.6	8.6	8.6	8.6
Elements,[b] μg/mL				
Aluminum	1	0.7	1	1
Boron	2500	∿300	∿500	∿500
Barium	≤0.1	—	≤0.5	—
Calcium	30	10	10	20
Cadmium	Not Detected			
Chlorine	—	10	10	5
Cobalt	≤0.2	—	—	—
Chromium	1	1	1	1
Cesium	0.8	—	—	—
Copper	0.5	—	≤0.5	≤0.5
Iron	1	0.6	0.7	0.8
Indium	Not Detected			
Potassium	7	1	5	1
Magnesium	7	20	30	10
Manganese	≤0.2	—	—	—
Molybdenum	—	≤2	≤3	≤3
Nickel	≤0.3	≤0.2	≤0.3	≤0.2
Phosphorus	0.6	0.3	0.7	0.3
Rubidium	0.6	—	—	—
Silicon	30	50	70	50
Silver	—	≤3	≤4	≤1
Sodium	>1000	∿300	∿500	∿500
Sulfur	—	20	20	20
Strontium	≤0.1	—	≤0.2	≤0.3
Yttrium	—	—	2	5
Zinc	≤0.3	0.5	0.7	1
Zirconium	Not Detected			

[a]Based on volume of one zeolite bed (2 mL).

[b]Determined by spark-source mass spectrographic analysis.

Table A-11. Assay of loaded sorbents by gamma spectrometry[a]

(values corrected for radioactive decay to Jan. 2, 1980)

Test Bed	IX2		IX3	IX4		IX5	IX6	
	2nd zeolite	3rd zeolite	HCR-S	HCR-S	SBR	MR-3	2nd zeolite	3rd zeolite
Bed volume, mL	2.0	2.0	1.0	7.7	7.7	4.4	2.0	2.0
Radionuclides, total μCi								
^{54}Mn	≤5.1E-3	1.0E-3	1.6E-4	9.5E-4	1.9E-4	2.5E-4	—	—
^{58}Co	≤1.4E-2	1.7E-3	7.8E-4	6.8E-3	4.9E-2	3.0E-4	—	—
^{60}Co	≤5.4E-3	1.2E-3	6.0E-4	4.3E-3	2.1E-2	1.7E-4	1.6E-3	1.5E-3
^{89}Sr	1.4E+3	1.2E+2	≤1.9E+2	≤3.5	≤7.2	≤0.4	—	—
^{95}Nb	≤2.7E-2	1.2E-2	1.8E-3	1.8E-3	5.9E-3	3.4E-4	3.3E-2	2.1E-2
^{95}Zr	—	—	—	9.6E-4	5.7E-3	1.5E-4	3.0E-2	2.0E-2
^{103}Ru	5.7E-2	2.0E-2	3.7E-3	5.0E-3	8.9E-2	8.6E-4	—	—
^{106}Ru	1.8E-1	9.3E-2	1.7E-2	2.0E-2	4.8E-1	3.7E-5	1.5E-1	9.5E-2
^{110m}Ag	—	—	3.8E-4	3.4E-4	7.3E-4	4.4E-5	9.5E-3	2.9E-2
^{113}Sn	≤5.4E-2	3.8E-3	≤2.4E-4	—	—	—	—	—
^{125}Sb	1.4E-1	1.3E-1	8.2E-2	5.3E-2	9.9E-1	1.5E-2	8.5E-2	6.7E-2
^{129m}Te	≤8.1E-1	≤3.2E-2	≤5.4E-3	—	—	—	—	—
^{134}Cs	3.1	7.3E-4	≤1.9E-4	≤1.7E-4	≤6.7E-4	6.4E-5	1.2E-1	1.3E-1
^{137}Cs	1.5E+1	2.2E-3	3.5E-4	9.6E-5	5.3E-4	2.8E-4	5.8E-1	6.0E-1
^{144}Ce	1.6E-1	4.1E-2	8.5E-3	1.1E-2	2.1E-2	3.0E-4	5.7E-2	3.8E-2

[a]First zeolite beds of Tests IX1 and IX6 were not assayed.

INTERNAL DISTRIBUTION

1. J. E. Bigelow
2-6. R. E. Brooksbank
7-11. D. O. Campbell
12-16. E. D. Collins
17. D. E. Ferguson
18. R. K. Kibbe
19-23. L. J. King
24-28. J. B. Knauer
29. A. L. Lotts
30. A. P. Malinauskas
31. F. R. Mynatt
32. H. Postma
33. D. B. Trauger
34. R. G. Wymer
35. Laboratory Records, RC
36. ORNL Patent Section

EXTERNAL DISTRIBUTION

37. Willis Bixby, DOE/EHG Site Office, TMI-Trailer 177, P. O. Box 88, Middletown, PA 17057
38. Jack DeVine, Waste Management Group, TMI-Trailer 102, P. O. Box 480, Middletown, PA 17057
39. R. L. Egli, DOE/ORO, Room 2037, P. O. Box E, Oak Ridge, TN 37830
40. Herbert Feinroth, DOE, Division of Nuclear Power Development, Mail Stop B-107, Washington, D.C. 20545
41. Gale Hovey, Waste Management Group, TMI-Trailer 102, P. O. Box 480, Middletown, PA 17057
42. A. C. Millunzi, DOE, Division of Nuclear Power Development, Mail Stop B-107, Washington, D.C. 20545
43. Goetz K. Oertel, Director, Division of Waste Products, Mail Stop B-107, Washington, D.C. 20545
44. Ben C. Rusche, Executive Director, South Carolina Research Institute, Suite 670, First National Bank Building, Columbia, SC 29801
45. R. M. Wallace, Savannah River Laboratory, Aiken, SC 29801
46. R. F. Wilson, Director, TMI-2, Metropolitan Edison Company, P. O. Box 480, Middletown, PA 17057
47. Office of the Assistant Manager for Energy Research and Development, DOE/ORO, P. O. Box E, Oak Ridge, TN 37830
48-49. Technical Information Center, Oak Ridge, TN 37830

END

DATE FILMED

1 / 11 / 93